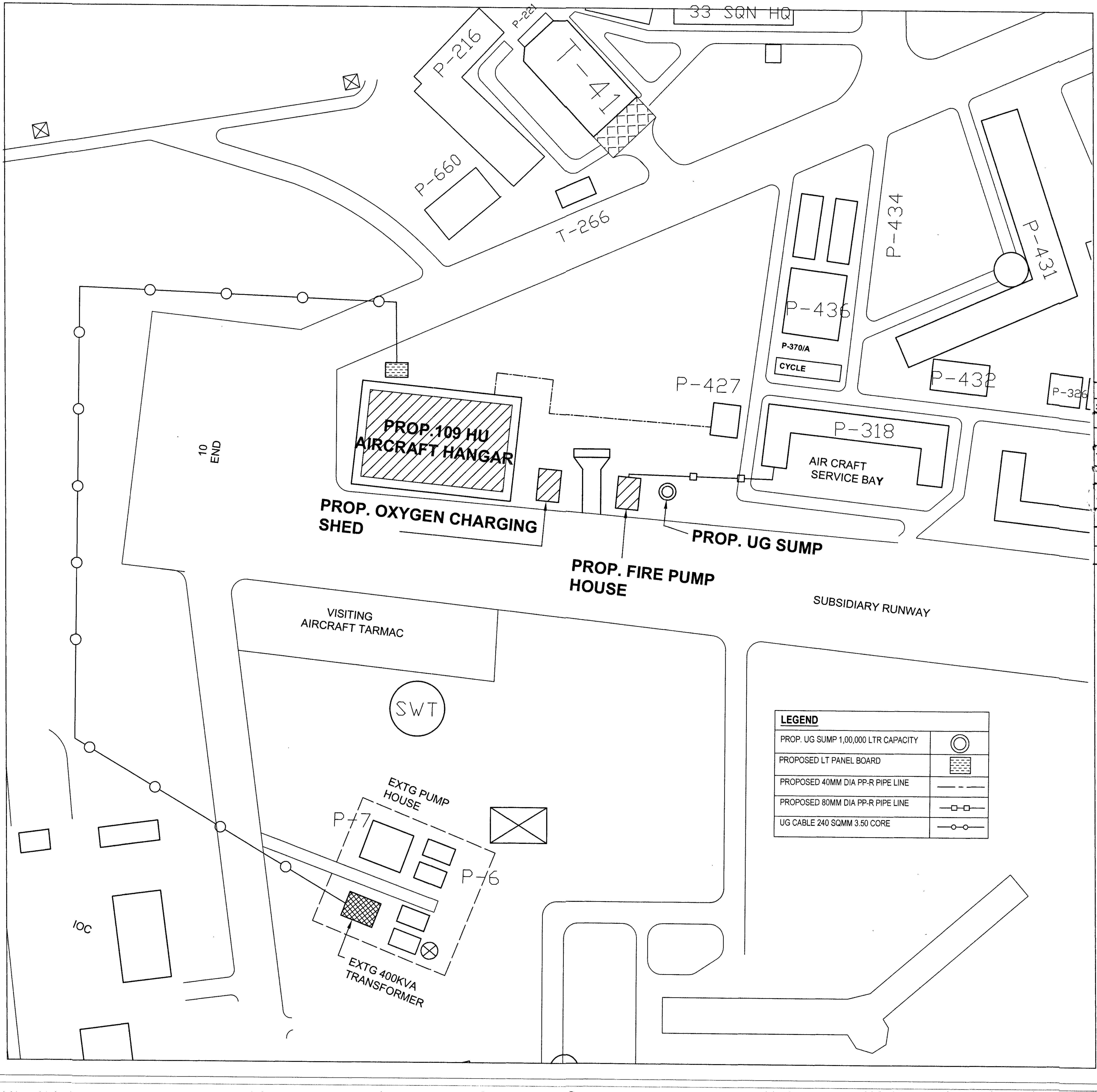
33 SQN HQ
P-221
P-216
T-41
P-660
T-266
P-434
P-431
P-436
P-370/A
CYCLE
P-432
P-326
P-427
P-318
AIR CRAFT
SERVICE BAY
10
END
PROP. 109 HU
AIRCRAFT HANGAR
PROP. OXYGEN CHARGING
SHED
PROP. FIRE PUMP
HOUSE
PROP. UG SUMP
SUBSIDIARY RUNWAY
VISITING
AIRCRAFT TARMAC
SWT
EXTG PUMP
HOUSE
P-7
P-6
IOC
EXTG 400KVA
TRANSFORMER

LEGEND

PROP. UG SUMP 1,00,000 LTR CAPACITY	◎
PROPOSED LT PANEL BOARD	▤
PROPOSED 40MM DIA PP-R PIPE LINE	— - —
PROPOSED 80MM DIA PP-R PIPE LINE	—□—□—
UG CABLE 240 SQMM 3.50 CORE	—○—○—

SL. NO.	NOTES
1	FOR NOTES AND REFERENCES TO DRGS REFER LIST OF DRAWINGS OF THIS PROJECT.
2	CONTRACTOR TO CHECK AND VERIFY ALL DIMENSIONS BEFORE EXECUTION OF THE WORK.
3	FIGURED DIMENSIONS SHALL BE FOLLOWED.

REFERENCE TO DRAWINGS

SL NO	DESCRIPTION	DRG NO	SHT NO	DATE
1.	SITE PLAN	AFB/SP/17/2023	1/1	03.08.2023
2.	HANGAR	AFB/WO/14/2023	1/1	02.08.2023
TYPICAL DRAWINGS				
3.	PUMPHOUSE / SUB STATION (83 SQM)			
(i)	PLAN, ELEVATION, SECTIONS & OTHER DETAILS	AFB/TD/383/2019	1/2 R	04.08.2017
(ii)	SOF & E/M DETAILS	AFB/TD/383/2017	2/2 R	10.11.2017
(iii)	STRUCTURAL DRGS	AFB/TD/383/2017(S)	1/1	18.9.2019
4.	UG SUMP	AFB/TD/397/2017(S)	1/1	21.12.2017

SL NO.	DATE	DESCRIPTION	SIGN.
1.	18.10.2023	REFERENCE TO DRAWINGS ADDED	

REVISIONS

PROVN OF AIRCRAFT HANGAR FOR 109 HU AT AF STN SULUR

SITE PLAN SHOWING EXTERNAL B&R AND E&M SERVICES

DATE	03 AUG 2023	**CHIEF ENGINEER (AIR FORCE) BANGALORE**	SHT. NO.
DRN	NB SUB RAHUL		1/1
TCD	—		
CKD	—		
SCALE	1 : 100	DRG NO. AFB / SP/ 17 / 2023	

AAD (E/M)

AAD (PLG)

SO1(E/M)
FOR CHIEF ENGINEER

DY. DIRECTOR (PLG)
FOR CHIEF ENGINEER

SCHEDULE OF FINISHES

SL NO	NAME OF ROOMS	FLOORS	FLOORS	FLOORS	WALLS INT	WALLS EXT	WALLS EXT	SKIRTING	SKIRTING	DADO	CEILING	CEILING	ROOF	ROOF	SURFACE FINISHES	SURFACE FINISHES	SURFACE FINISHES	SURFACE FINISHES	REMARKS
		6 TO 7 MM NON- SKID CERAMIC TILES 300X300 LAID OVER 15MM TH . SCREED BED IN CM 1:4 OVER 23-24 TH PCC M-15 LAID OVER 75MM TH PCC M-7.5 OVER 100 MM TH HARDCORE OVER APPROVED WELL RAMMED EARTH .	75 MM THICK PCC M20 LAID OVER 100 MM THICK PCC M 7.5 LAID OVER 100 MM TH HARDCORE OVER APPROVED WELL RAMMED EARTH .		10MM.TH.CEMENT PLASTER IN CM 1:6 ON WALLS ABOVE SKIRTING/DADO INCLUDING CONCRETE SURFACES IN CONTINUATION	15 MM TH . CEMENT PLASTER IN CM 1:4 IN TWO COATS (5MM SETTING COAT MIXED WITH WPC OVER 10 MM BACKING COAT AS PER MANUFACTURES INSTRUCTION) ON WALLS INCLUDING CONCRETE SURFACES IN CONTINUATION.		100MM HIGH CEMENT PLASTER 10MM THICK IN CM (1:4) FINISHED EVEN AND SMOOTH .		5 TO 6MM.TH.GLAZED CERAMIC TILES 300X450MM OVER 10MM.TH.CM(1:3) BACKING COAT	5MM.TH.PLASTERING IN CM(1:3)ON SOFFITS AND SIDES OF BEAMS,LOFT,RCC SHELVES,SIDES AND SOFFITS OF COLUMNS,RCC SHELVES CHAJJAS AND ROOF PROJECTIONS		WATER PROOFING TREATMENT AS PER DRG NO. AFB/TD/~~266/06~~ SHT NO. 1/1 (TYPE 'C') /402/18 (CS)		ALL INTERNAL PLASTERED SURFACES OF WALLS ABOVE SKIRTING/DADO	ALL EXTERNAL PLASTERED SURFACES OF WALLS AND EXPOSED RCC SURFACES SUCH AS FACIAS, CHAJJAS ETC.	ROOF SLAB INCLUDING ROOF PROJECTIONS,SOFFITS AND SIDES OF BEAMS, RCC SHELVES ,CHAJJAS ETC.	ALL EXPOSED SURFACES IF WOOD/STEEL	
1	2	3	4	5	6	7	8	9	10	11	12	13	14	15	16	17	18	19	20
1	CONTROL ROOM		☒		☒	☒		☒			☒		☒		T-1	T-3	T-1	T-4	
2	REST ROOM		☒		☒	☒		☒			☒		☒		T-1	T-3	T-1	T-4	
3	TOILET	☒			☒	☒				☒	☒		☒		T-1	T-3	T-1	T-4	DADO HEIGHT
4	BATH	☒			☒	☒				☒	☒		☒		T-1	T-3	T-1	T-4	WC-UPTO 1200mm HT BATH-UPTO 2100 HT
5	WC	☒			☒	☒				☒	☒		☒		T-1	T-3	T-1	T-4	TOILET UPTO 1200mm HT AS PER DRG
6	RAMP		@ ☒																@ CHEQUERED FINISH WHILE CONRETE IS GREEN
7	VERANDAH		☒		☒	☒		☒			☒		☒		T-1	T-3	T-1	T-4	

LEGEND

TREATMENT	DESCRIPTION
☒	INDICATED MATERIAL TO BE USED
T-1	3 COATS OF WHITE WASH INCLUDING PREPARATION
T-3	2 COATS OF CEMENT BASED PAINT OVER ONE COAT OF PRIMER
T-4	2 COATS OF SYNTHETIC ENAMEL PAINT OVER ONE COAT OF PINK / ZINC CHROME.

NOTES

1 FOR NOTES AND REFERENCE TO DRGS REF SHT NO 1 / 2.

2 LOCATION OF LIGHT POINTS / FAN POINTS/ PLUG POINTS/ POWER PTS AND LIGHT FITTING SHOWN IN DRG IS TENTATIVE AND SAME CAN BE FINALISED AT THE TIME OF EXECUTION BY GE/ ENGR - IN CHARGE.

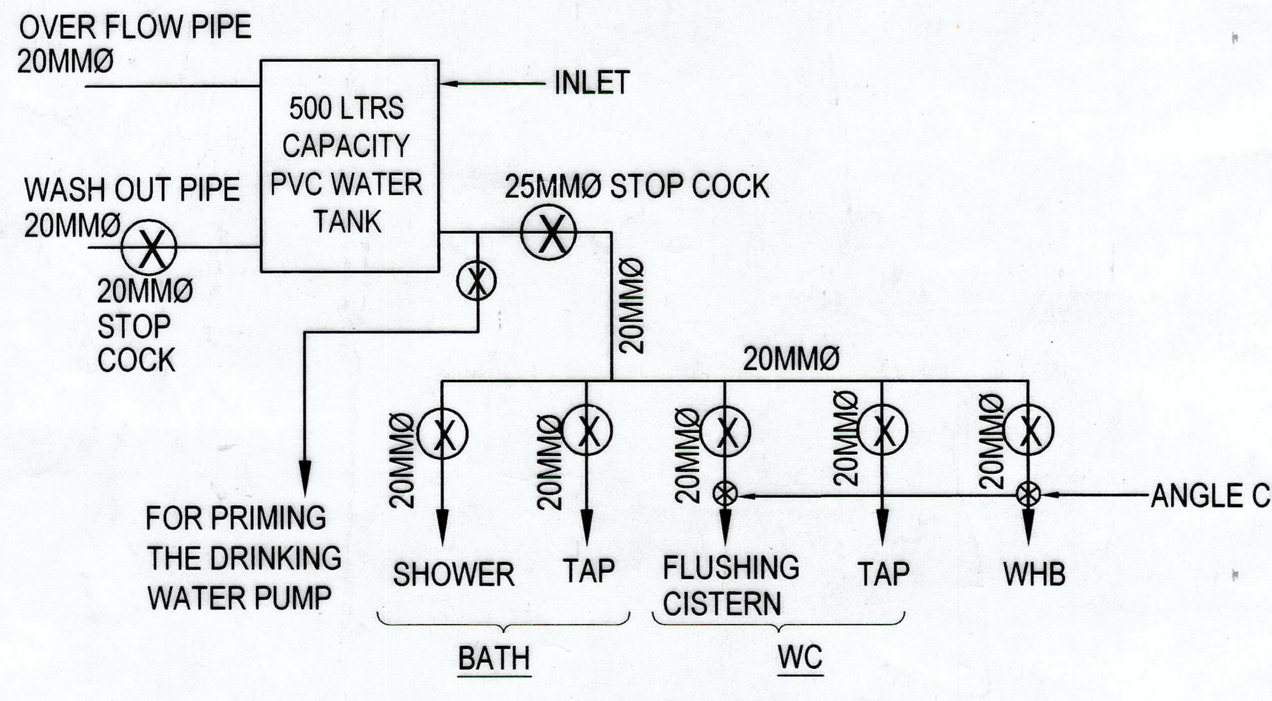

OVER FLOW PIPE 20MMØ
500 LTRS CAPACITY PVC WATER TANK
INLET
WASH OUT PIPE 20MMØ
20MMØ STOP COCK
25MMØ STOP COCK
20MMØ
20MMØ
20MMØ
20MMØ
20MMØ
20MMØ
20MMØ
ANGLE COCK
FOR PRIMING THE DRINKING WATER PUMP
SHOWER
TAP
FLUSHING CISTERN
TAP
WHB
BATH
WC

SCHEMATIC DIAGRAM FOR WATER SUPPLY

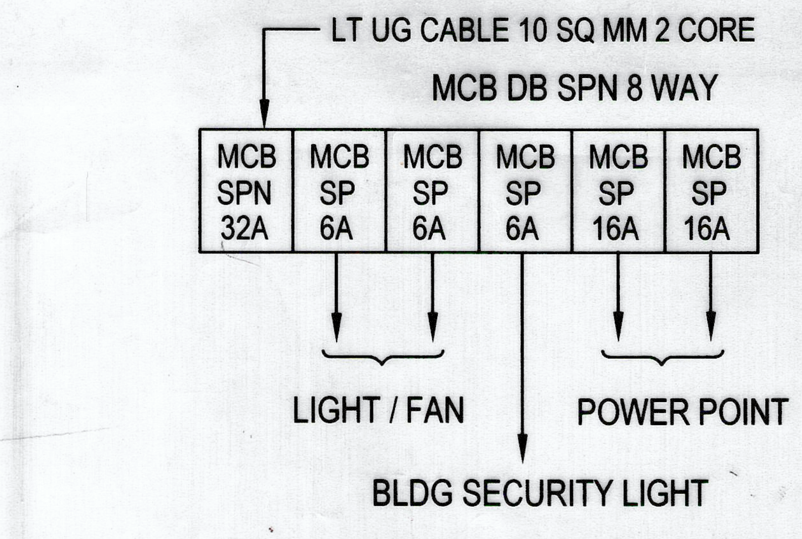

LT UG CABLE 10 SQ MM 2 CORE
MCB DB SPN 8 WAY
MCB SPN 32A
MCB SP 6A
MCB SP 6A
MCB SP 6A
MCB SP 16A
MCB SP 16A
LIGHT / FAN
POWER POINT
BLDG SECURITY LIGHT

SCHEMATIC DIAGRAM FOR ELECTRIC SUPPLY

	LEGEND	
1.	LED TUBE FITTING 20 WATTS	├──┤
2.	SOCKET 5 A	◗
3.	SOCKET 15 A	◗
4.	DISTRIBUTION BOARD	▱ DB
5.	CEILING FAN	∞
6.	EXHAUST FAN	⊘
7.	LED SURFACE FITTING ROUND 12 W	—○
8.	LED SECURITY LIGHT 36 W	—□

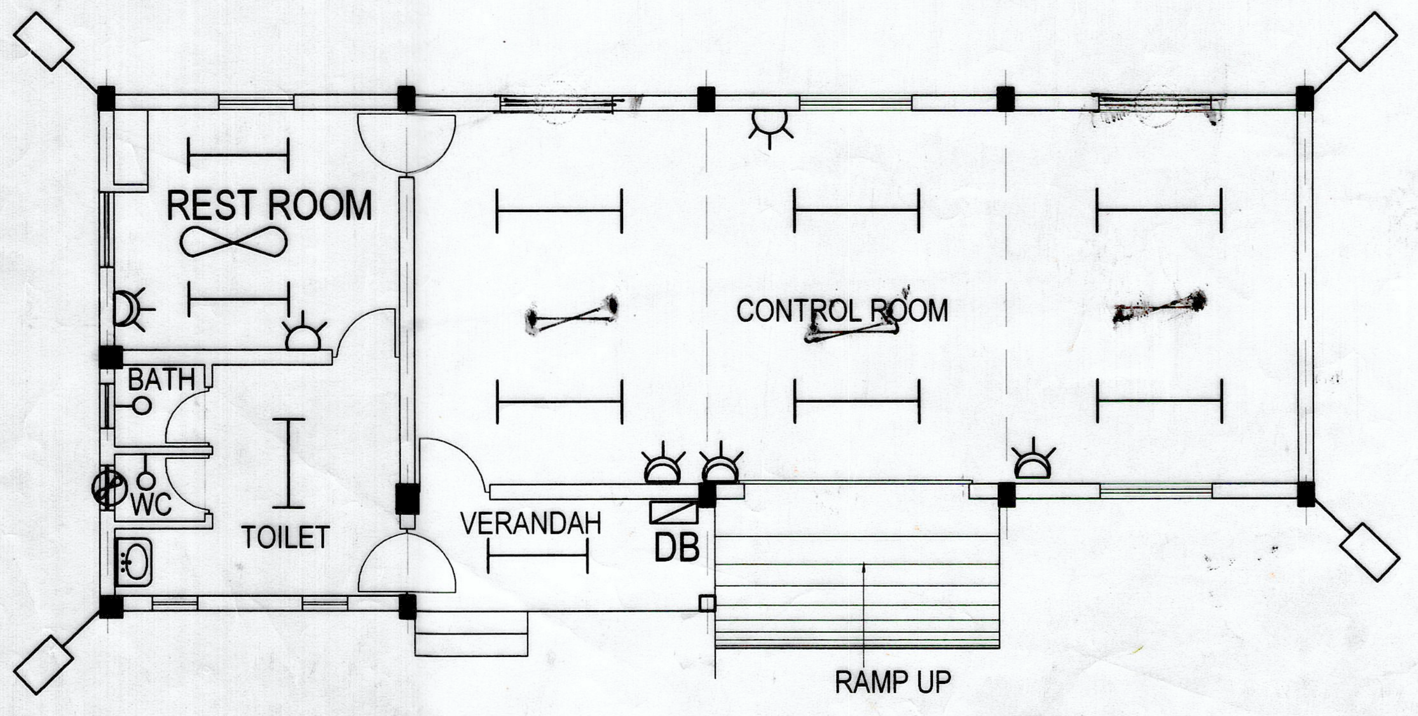

REST ROOM
CONTROL ROOM
BATH
WC
TOILET
VERANDAH
DB
RAMP UP

PLAN SHOWING INTERNAL ELECTRIFICATION

SCALE 1:100

THIS DRAWING IS SUPERSEEDED OF THE DRG OF 'PUMP HOUSE/SUB STATION (83 SQM) SCHEDULE OF FINISHES & E/M. DETAILS DRG. NO: AFB/TD/383/2017 SHT NO 2/2 DTD 04 AUG 2017 ON 10 NOV 2017

SL NO	REVISION	SIGN.
3	SL NO: 14 REVISED IN SCHEDULE OF FINISHES (ROOF)	18-9-19
2.	SUPERCEDED NOTE ADDED	
1.	THIS DRAWING SHEET NO IS REVISED AS 2R/2	

PUMP HOUSE/SUB STATION (83 SQM)

SCHEDULE OF FINISHES & E/M DETAILS

DATE	10 NOV 2017	CHIEF ENGINEER (AIR FORCE) BANGALORE	SHT. NO
DRN	SUB PRAJEETH		~~2/2~~ 2R/2
TCD	–		
CKD	–		
SCALE	AS SHOWN	REF DRG NO: AFB / TD / 383 / 2017	

SO1 AAD (E/M)

AAD (PLG)

DIR(E/M)
FOR CHIEF ENGINEER

R.V. R
Jt DIR (PLG)
FOR CHIEF ENGINEER

SCHEDULE OF RCC COLUMNS

SL NO	NAME OF COLUMN	SIZE	SHAPE	SHAPE OF TIES	REINFORCEMENT	LATERAL TIES: SPECIAL CONFINEMENT REINFORCEMENT AS PER Cl.7.4.6 OF I S 13920 AT EACH JOINTS: DIA & SPACING	LATERAL TIES: SPECIAL CONFINEMENT REINFORCEMENT AS PER Cl.7.4.6 OF I S 13920 AT EACH JOINTS: OVER LENGTH 'Lo' TOWARDS MID SPAN	AT MIDDLE BALANCE PORTION	REMARKS
1	C1	300Ø	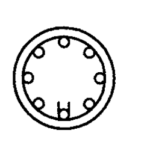	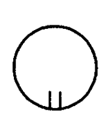	○ 8 - 12 #	10# @ 75 C/C	600	8# @ 150 C/C	
2	C2	300X400	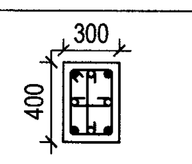	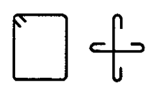	● 4 - 16 # ○ 4 - 12 #	10# @ 75 C/C	600	8# @ 150 C/C	

SCHEDULE OF FOOTINGS

SL NO	NAME OF FOOTING	SBC	SIZE L x B	d	d1	D	REINFORCEMENT: L DIRECTION: TOP	REINFORCEMENT: L DIRECTION: BOTTOM	REINFORCEMENT: B DIRECTION: TOP	REINFORCEMENT: B DIRECTION: BOTTOM	REMARKS
1	F 1	200Kn X SQM 150Kn X SQM	1300 X 1300 1500 X 1500	250	300	1500	-	12# @ 290C/C	-	12# @ 290C/C	
2	F2	200Kn X SQM 150Kn X SQM	1600 X 1600 1800 X 1800	250	400	1500	-	12# @ 280C/C	-	12# @ 280C/C	
3	F3	200Kn X SQM 150Kn X SQM	1800 X 1800 2000 X 2000	250	500	1500	-	12# @ 250C/C	-	12# @ 250C/C	
4	CF1	200Kn X SQM 150Kn X SQM	2000 X 2600 2200 X 2800	-	400	1500	12# @ 100C/C	12# @ 100C/C	12# @ 150C/C	12# @ 150C/C	

SCHEDULE OF PLINTH BEAMS

SL-NO.	BEAM NOS	SIZE: B	SIZE: D	MAIN BARS THROUGH: BOTTOM BARS	MAIN BARS THROUGH: TOP BARS	EXTRA BARS: AT BOTTOM	EXTRA BARS: AT TOP SUPPORT(0.3L)	STIRRUPS: AT ENDS (0.3 L)	STIRRUPS: AT MIDDLE BALANCE	REMARKS
1	PB1	300	450	3 -12 #	3 -12 #	-	-	8# @ 125 C/C	8# @ 150 C/C	
2	PB2	300	450	3 -12 #	3 -12 #	1 -16 #	1 -16 #	8# @ 125 C/C	8# @ 150 C/C	
3	PB3	300	450	3 -12 #	3 -12 #	1 -16 #	1 -16 #	8# @ 125 C/C	8# @ 150 C/C	

REFERENCE TO DRAWINGS

SL No.	DESCRPTION	DRAWING No.	SHEET No.
1	FOR RCC GENERAL NOTES & TYPICAL DETAILS	AFB/TD/230/04	1 / 1
2	FOR CHHAJAS, BEAMS, SLABS AND OTHER MISC. DETAILS	AFB/TD/231/04	1 / 2 & 2 / 2
3	REINFORCEMENT DETAILING FOR DUCTILITY	AFB/TD/222/04	1 / 1
4	DETAILS OF LINTEL AT JUNCTION, RCC STAGING & RAISED PLATFORM	AFB/TD/333/2010(S)	1 / 1

SCHEDULE OF LINTEL BEAMS AND ROOF BEAMS

SL-NO.	BEAM NOS	SIZE: B	SIZE: D	MAIN BARS THROUGH: BOTTOM BARS	MAIN BARS THROUGH: TOP BARS	EXTRA BARS: AT BOTTOM	EXTRA BARS: AT TOP SUPPORT(0.3L)	STIRRUPS: AT ENDS (0.3 L)	STIRRUPS: AT MIDDLE BALANCE	REMARKS
1	LB1	200	250	3 -12 #	3 -12 #	-	-	8# @ 100 C/C	8# @ 100 C/C	
2	LB2	200	300	3 -12 #	3 -12 #	-	-	8# @ 100 C/C	8# @ 120 C/C	
3	RB1	300	300	3 -12 #	3 -12 #	1 -12 #	1 -12 #	8# @ 100 C/C	8# @ 120 C/C	
4	RB2	300	450	3 -12 #	3 -12 #	1 -16 #	1 -16 #	8# @ 125 C/C	8# @ 150 C/C	
5	RB3	300	450	3 -12 #	3 -12 #	1 -16 #	1 -16 #	8# @ 125 C/C	8# @ 150 C/C	
6	RB4	300	300	3 -12 #	3 -12 #	-	-	8# @ 100 C/C	8# @ 120 C/C	

SCHEDULE OF ROOF SLABS

SL No.	SLAB	THICKNESS IN mm	MAIN BARS: SHORT SPAN: DIA	MAIN BARS: SHORT SPAN: SPACING	MAIN BARS: LONG SPAN: DIA	MAIN BARS: LONG SPAN: SPACING	EXTRA BARS OVER END SUPPORT: SHORT SPAN: DIA	EXTRA BARS OVER END SUPPORT: SHORT SPAN: SPACING	EXTRA BARS OVER END SUPPORT: LONG SPAN: DIA	EXTRA BARS OVER END SUPPORT: LONG SPAN: SPACING	TYPE OF SLAB	REMARKS
1	RS1	130	8	150	8	200	8	300	8	400	ONE WAY	1) ALTERNATE BARS CKD AT SUPPORT. 2) PROVIDE 8 # @ 150 C/C AT SUPPORT AT TOP AS DISTRIBUTION / CRANK CONNECTOR BARS (MIN 3NOS)
2	RS2	150	8	150	8	150	8	300	8	300	TWO WAY	

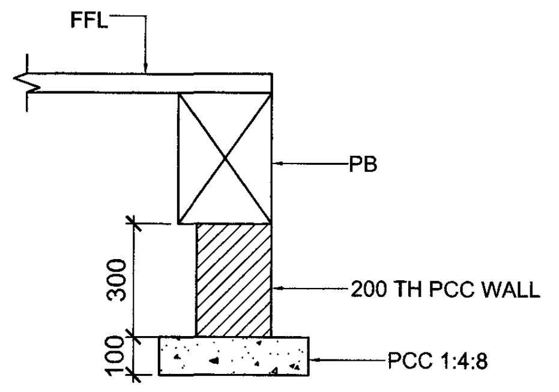
FFL
PB
300
200 TH PCC WALL
100
PCC 1:4:8

TYPICAL DETAILS OF FDN. BELOW PBS FOR EXTERNAL WALLS FOR PBs LESS THAN 500 DEPTH

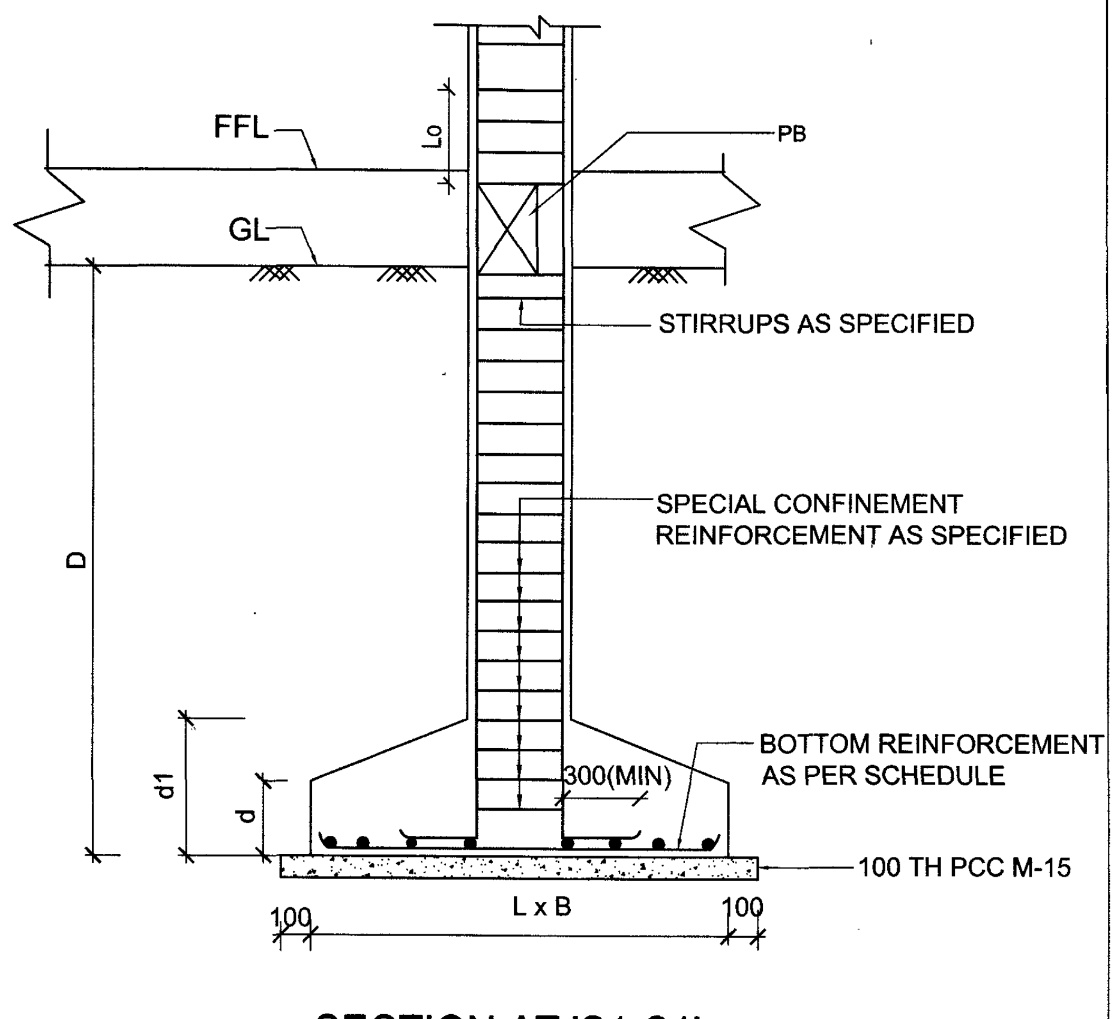
FFL
Lo
PB
GL
STIRRUPS AS SPECIFIED
D
SPECIAL CONFINEMENT
REINFORCEMENT AS SPECIFIED
d1
d
300(MIN)
BOTTOM REINFORCEMENT
AS PER SCHEDULE
100 TH PCC M-15
100
L x B
100

SECTION AT 'S1-S1'

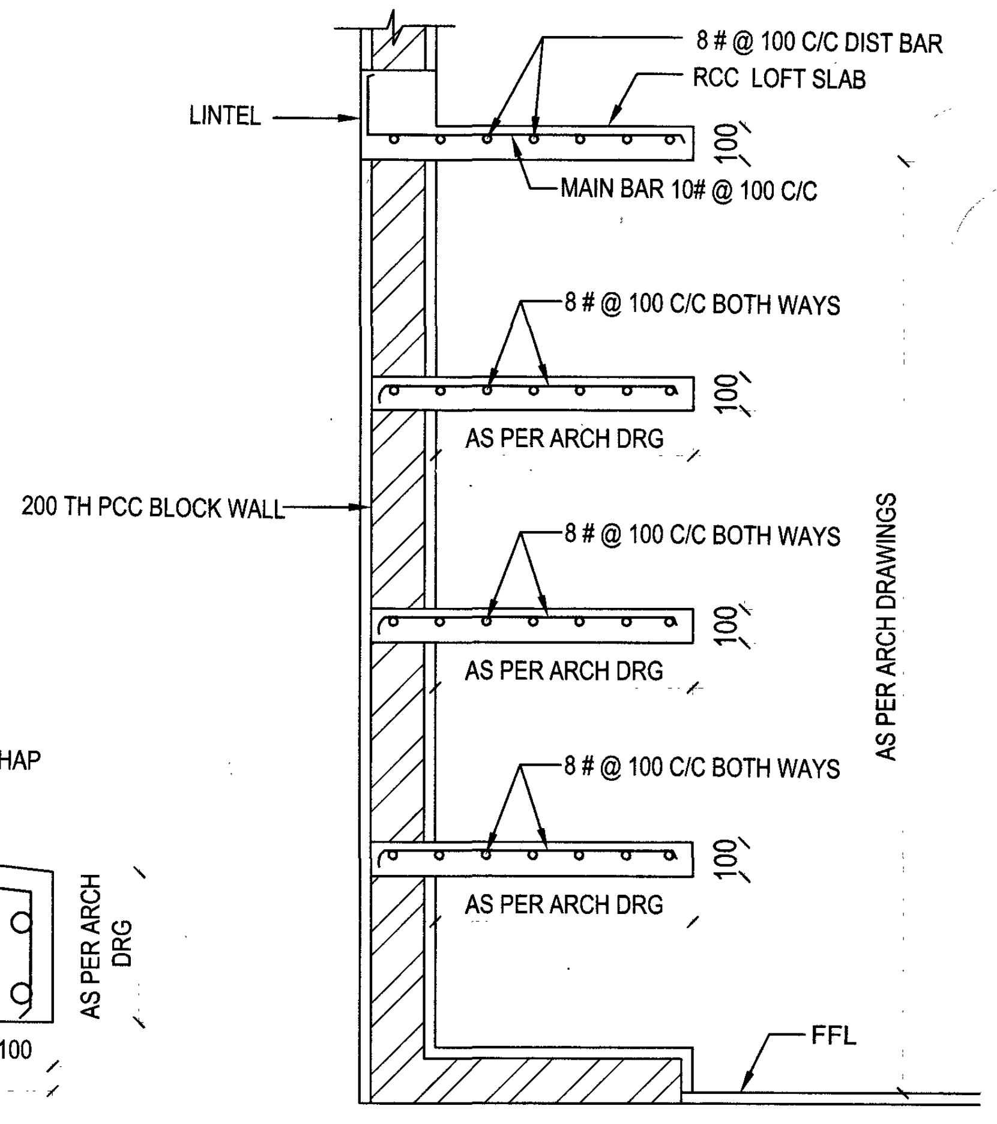
8 # @ 100 C/C DIST BAR
RCC LOFT SLAB
LINTEL
100
MAIN BAR 10# @ 100 C/C
8 # @ 100 C/C BOTH WAYS
100
AS PER ARCH DRG
200 TH PCC BLOCK WALL
8 # @ 100 C/C BOTH WAYS
100
AS PER ARCH DRG
AS PER ARCH DRAWINGS
8 # @ 100 C/C BOTH WAYS
100
AS PER ARCH DRG
FFL

DETAIL OF 3 TIER SHELVES

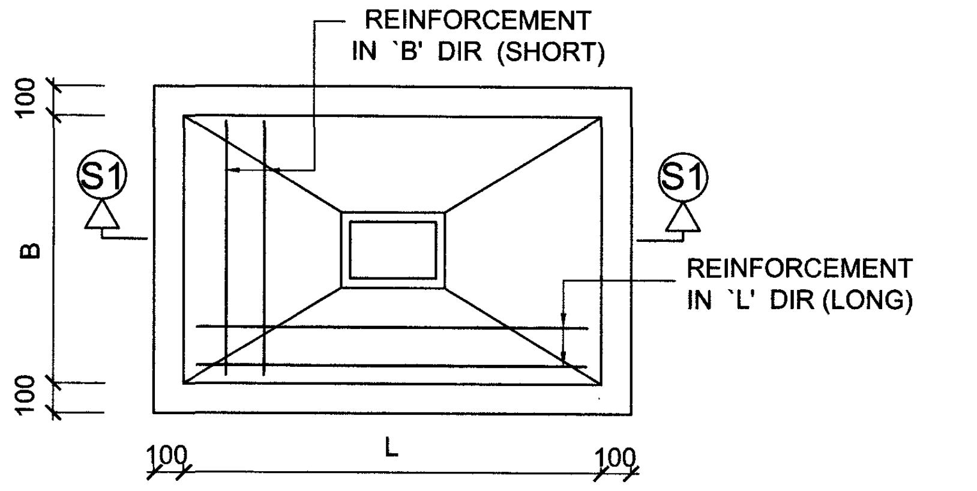
REINFORCEMENT
IN `B' DIR (SHORT)
100
S1
S1
B
REINFORCEMENT
IN `L' DIR (LONG)
100
100
L
100

PLAN (ISOLATED FOOTING)

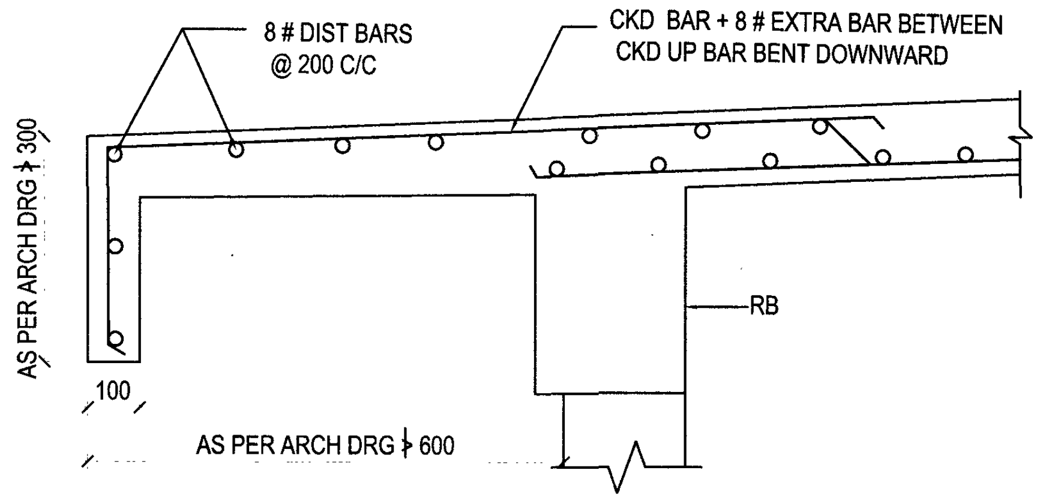
8 # DIST BARS
@ 200 C/C
CKD BAR + 8 # EXTRA BAR BETWEEN
CKD UP BAR BENT DOWNWARD
AS PER ARCH DRG ‡ 300
RB
100
AS PER ARCH DRG ‡ 600

DETAIL OF RCC ROOF PROJECTION

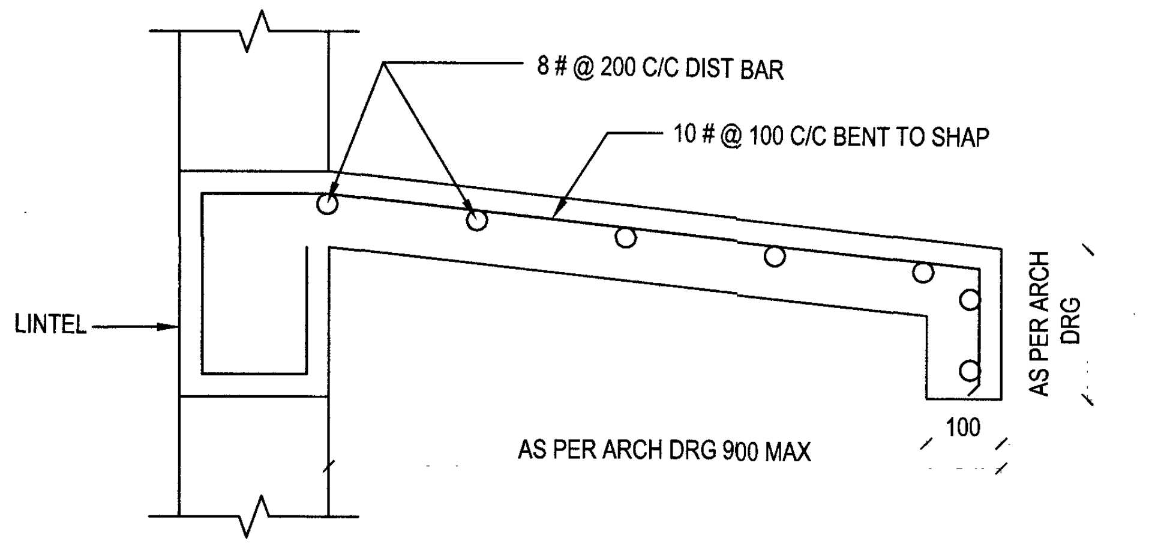
8 # @ 200 C/C DIST BAR
10 # @ 100 C/C BENT TO SHAP
LINTEL
AS PER ARCH DRG
AS PER ARCH DRG 900 MAX
100

DETAIL OFRCC CHAJJA 900 WIDE

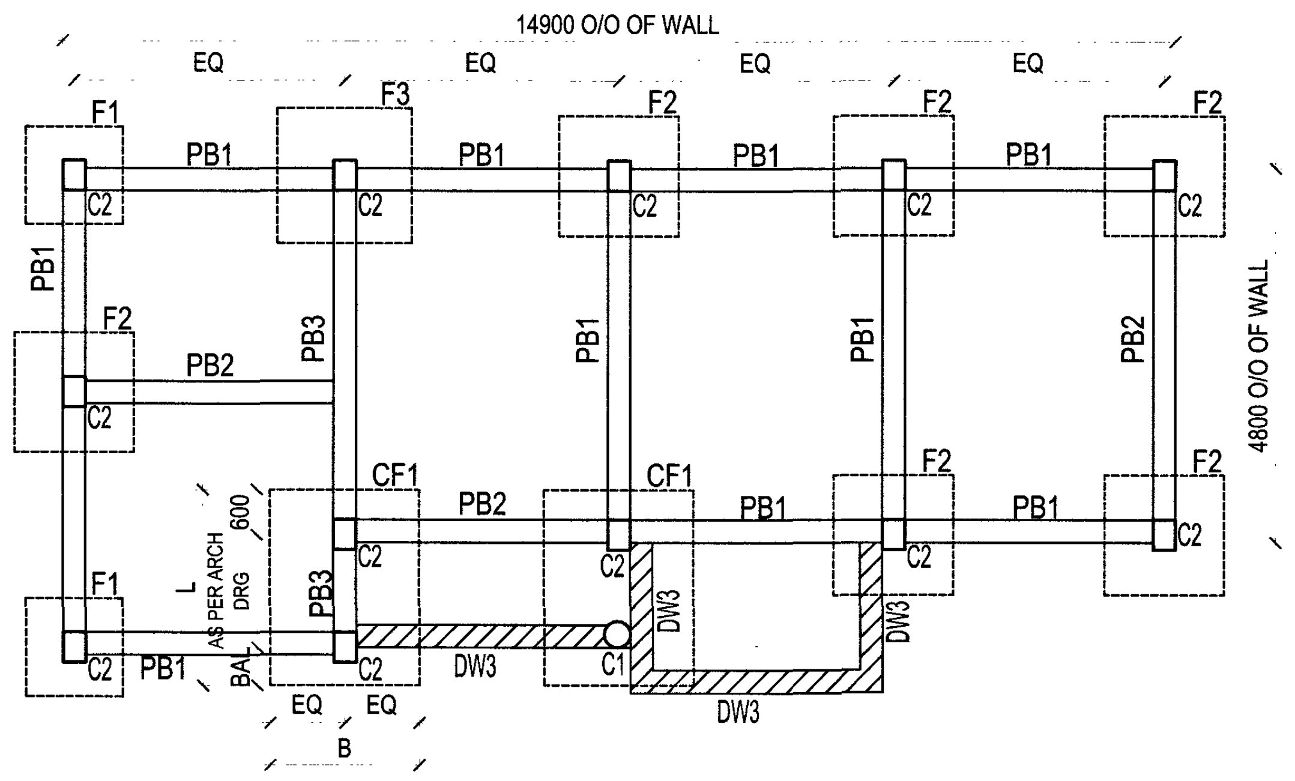
14900 O/O OF WALL
EQ
EQ
EQ
EQ
F1
F3
F2
F2
F2
PB1
PB1
PB1
PB1
C2
C2
C2
C2
C2
PB1
F2
PB3
PB1
PB1
PB2
4800 O/O OF WALL
PB2
CF1
CF1
F2
PB2
PB1
PB1
600
AS PER ARCH DRG
F1
C2
C2
C2
C2
C2
DW3
DW3
PB3
PB1
C2
C2
C1
DW3
DW3
EQ
EQ
B
L

STRUCTURAL FDN PLAN AT PLINTH LEVEL

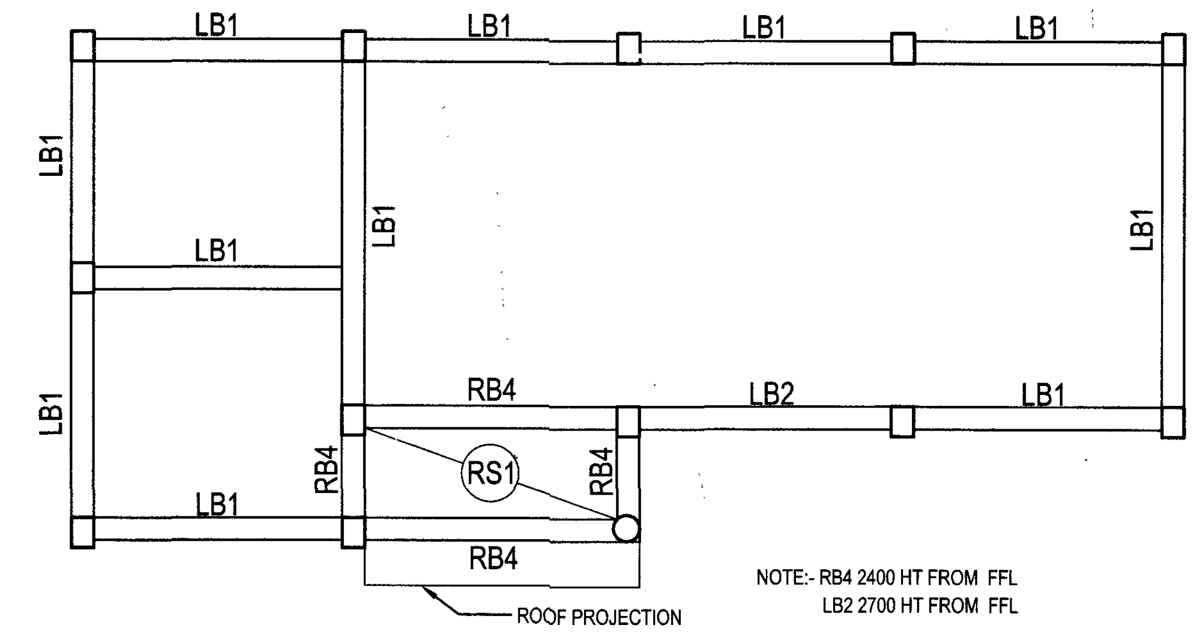
LB1
LB1
LB1
LB1
LB1
LB1
LB1
LB1
LB1
RB4
LB2
LB1
LB1
RB4
RS1
RB4
LB1
RB4
ROOF PROJECTION
NOTE:- RB4 2400 HT FROM FFL
LB2 2700 HT FROM FFL

STRUCTURAL PLAN AT LINTEL LEVEL(2400)

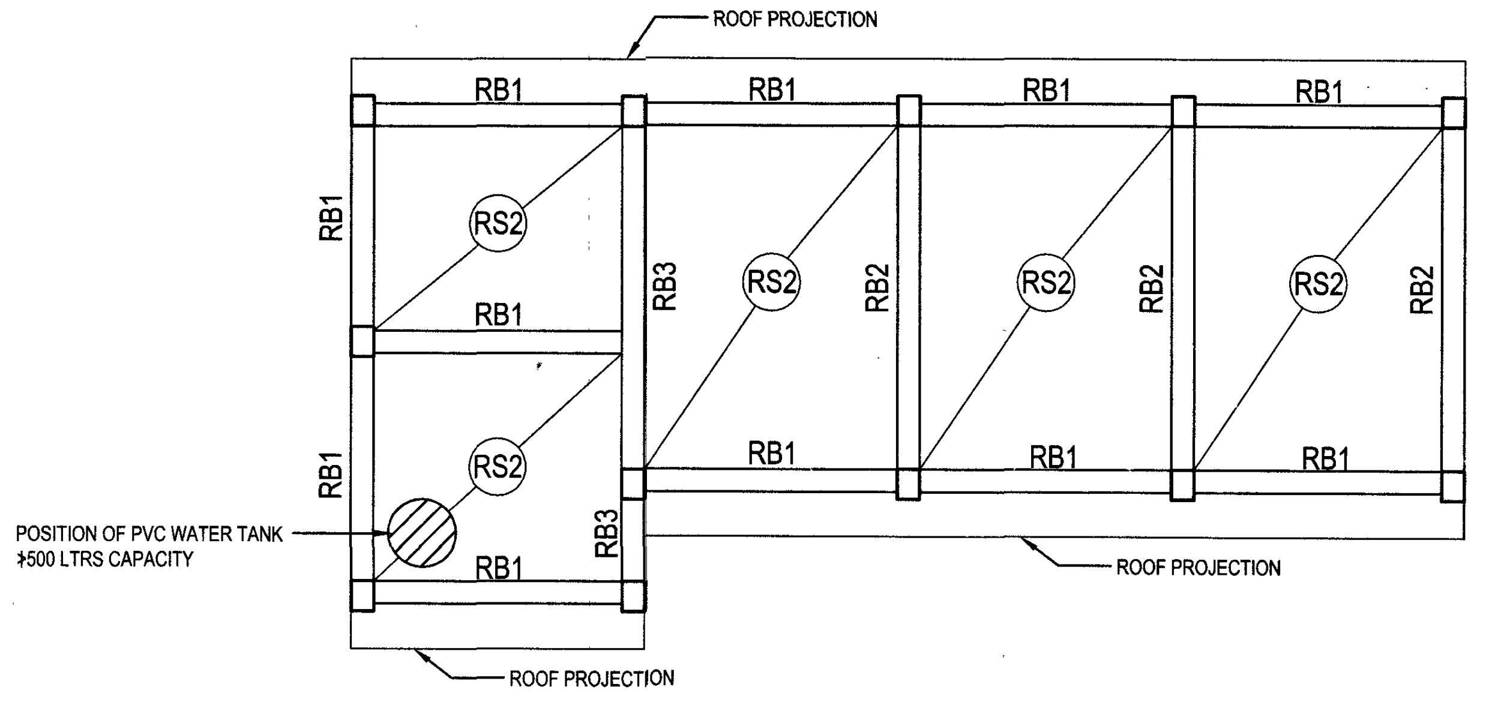
ROOF PROJECTION
RB1
RB1
RB1
RB1
RB1
RS2
RB1
RB3
RS2
RB2
RS2
RB2
RS2
RB2
RB1
RS2
RB1
RB1
RB1
RB3
RB1
POSITION OF PVC WATER TANK
500 LTRS CAPACITY
ROOF PROJECTION
ROOF PROJECTION

STRUCTURAL PLAN AT ROOF BEAMS AND ROOF SLABS

NOTES

1. CONTRACTOR TO CHECK AND VERIFY ALL DIMENSIONS BEFORE EXECUTION OF THE WORK.
2. FIGURED DIMENSIONS SHALL BE FOLLOWED.
3. ALL DIMENSIONS ARE GIVEN IN MILLIMETERS UNLESS OTHERWISE SPECIFIED.
4. MIX OF CONCRETE FOR ALL RCC WORKS SHALL BE M-25 DESIGN MIX IN ACCORDANCE WITH IS-456-2000 (FOURTH REVISION).
5. ALL REINFORCEMENT IN RCC WORK SHALL BE HIGH STRENGTH STEEL BARS OF Fe - 500 GRADE PRODUCED BY TMT PROCESS HAVING ELONGATION MORE THAN 18% & CONFORMING TO OTHER REQUIREMENTS OF IS 1786 - 2008. ACTUAL YIELD STRENGTH BASED ON TENSILE TEST OF STEEL MUST NOT EXCEED THE SPECIFIED YIELD STRENGTH BY MORE THAN 120 MPA. RATIO OF ULTIMATE YIELD STRENGTH TO ACTUAL YIELD STRENGTH SHOULD BE AT LEAST 1.25
6. THE FOUNDATION IS DESIGNED FOR SBC AS INDICATED IN THE SCHEDULE @ 1500 MM DEPTH FROM ORIGINAL GL. [illegible]E SHALL CHECK & VERIFY SBC AT SITE BEFORE EXECUTION. ANY VARIATION IN SBC & DEPTH OF FOUNDATION SHALL BE REPORTED TO THIS HQ.
7. GL MENTIONED IN THIS DRG IS ORIGINAL GROUND LEVEL OR MADE UP GROUND LEVEL OBTAINED BY CUTTING ONLY. IN NO CIRCUMSTANCES FOOTING SHALL BE FOUNDED IN FILL UP AREA INCASE OF MADE UP GL (MGL) MIN DEPTH OF FDN FROM VIRGIN SOIL SHALL BE 1500.
8. ALL RCC MEMBERS HAVE BEEN DESIGNED FOR FOLLOWING PARAMETERS AS PER IS : 456 & IS : 1893.
   - a) EXPOSURE CONDITION FOR DURABILITY CRITERIA - MODERATE
   - b) FIRE RESISTANCE RATING - 1.5 HOURS
   - c) SEISMIC ZONE - ZONE II/ III AS PER IS : 1893 -2002
9. UNLESS OTHERWISE STATED ALL FOOTINGS SHALL BE FOUNDED AT SAME LEVEL. BACK FILLING SHALL BE DONE IN LAYERS AND WELL COMPACTED.
10. CLEAR COVER TO REINFORCEMENT INCLUDING LINKS SHALL BE AS UNDER
    - (i) SLAB - 30 MM
    - (ii) BEAM - 30 MM
    - (iii) COLUMN - 40 MM
    - (iv) FOOTING - 50 MM
11. WHEREVER REINFORCEMENT IS REQUIRED TO BE PROVIDED IN LAYERS IN RCC BEAMS 25 # SPACER BAR @ 1000C/C SHALL BE PROVIDED UNLESS OTHERWISE STATED.
12. DWARF WALL SHALL NOT BE BUILT ON FILLING UP / LOOSE SOIL.
13. ALL STRL DRGS SHALL BE READ AND IN CONJUNCTION WITH RELEVANT ARCH DRGS AND ANY DISCREPANCY BETWEEN THEM SHALL BE BROUGHT TO THE NOTICE OF ACCEPTING OFFICER FOR NECESSARY ACTION.
14. RCC CILLS 75 MM TH WITH 3 NOS 10 # MAIN BARS AND 8 # @ 200 C/C DISTRIBUTION EXTENDING 50 MM BEYOND THE WINDOWS BOTH SIDES IN THE WALL TO BE PROVIDED AT CILL LEVEL UNLESS OTHERWISE STATED IN ARCH DRG.
15. IN CASE OF OVERLAPPING OF LEAN CONCRETE BELOW FDN THE SAME MAY BE LAID IN CONTINUITY.
16. IN CASE OF GL IS LOWER THAN THE SOFFIT OF PB THE RCC FIN IN PB AT PERIPHERY ONLY BE PROVIDED AS PER [illegible] D DRG.
17. WHEREVER BEAM IS RESTING DIRECTLY ON THE WALL PCC BED BLOCK OF SIZE 600x230 / 600x200 WITH M-30 CONCRETE SHALL BE PROVIDED IN 230/200 TH WALL AND SIZE OF 400x115 FOR 115 TH WALL.
18. ALL WALLS ARE NON LOAD BEARING WALLS AND THESE SHALL BE CONSTRUCTED ONLY AFTER RCC FRAME STRUCTURE IS COMPLETED.
19. WHEREVER, PARTITION WALL IS PROVIDED OVER RCC SLAB WITHOUT ANY BEAM UNDERNEATH, HIDDEN BEAM SHALL BE PROVIDED AS 400 X SLAB THICKNESS WITH MAIN REINFORCEMENT 8 BARS OF 12 mm (TOP 4 & BOTTOM 4) AND 8 mm 2 LEGGED STIRRUPS AT 75 C/C.
20. SCAFFOLDING AND SHUTTERING SHALL BE WELL DESIGNED MADE AND ERECTED IN ACCORDANCE TO RELEVANT IS PROVISIONS.
21. DIMENSIONS OF FOOTING INDICATED IN FOUNDATION PLAN ARE EXCLUSIVE OF OFFSET OF LEAN CONC
22. WHEREVER TOP EXTRA BAR AT SUPPORT FOR TWO ADJACENT CONTINUOUS SPAN OF BEAM / SLAB DIFFERS, LARGEST OF TWO QTY STEEL SHALL BE PROVIDED FOR BOTH SPAN AT COMMON SUPPORT.
23. TOP OF THE PLINTH BEAM SHALL BE 50 mm BELOW FFL OF GROUND FLOOR.
24. IN FRAMED STRUCTURE, BELOW SOFFIT OF BEAM 50 MM MASTIC COMPOUND SHALL BE PROVIDED BETWEEN MASONRY AND SOFFIT OF BEAM.
25. HDPE WATER TANK SHALL BE PROVIDED OVER ROOF SLAB OF TOILET, PREFERABLY AT CORNER OF SLAB. EXTRA REINFORCEMENT SHALL BE PROVIDED IN RCC SLAB AS SPECIFIED IN TD DRG.
26. DUCTILE DETAILING OF REINFORCEMENT SHALL BE AS SHOWN IN TD DRG & IS - 13920.
27. NO CONTINUOUS LINTEL BAND/BEAM NOT REQUIRED IRRESPECTIVE OF WHATEVER IS SPECIFIED ELSEWHERE IN THE DRGS/TENDER DOCUMENTS.
28. RCC DETAIL FOR CHAJJA WITH LINTEL SHALL BE AS GIVEN IN TD DRG. UNLESS OTHERWISE SPECIFICALLY GIVEN IN THE STRL DRG.
29. DEPTH OF RCC BEAM SHALL BE UNIFORM AS MENTIONED IN SCHEDULE OF RCC BEAMS AND SHALL BE MATCHING WITH SLAB PROFILE GIVEN IN ARCH DRGS.
30. VERTICAL REINFORCEMENT FROM COL. SHOULD BE PROVIDED WITH MINIMUM DEVELOPMENT LENGTH IN FOOTING AS SHOWN OR 300 MM MIN HORIZONTAL LENGTH WHICHEVER IS MORE.
31. BLACK COTTON SOIL IF ENCOUNTERED UNDER THE FLOOR SHALL BE REPLACED WITH GOOD SOIL OR CASE SHALL BE REFER TO THIS HQ.
32. AT THE JUNCTION OF ADJACENT BEAMS (IN ONE LINE) WITH DIFFERENT MARKING, THE TOP REINFORCEMENT OF THE BEAM WITH LARGER REINFORCEMENT SHALL BE EXTENDED TO A LENGTH L/3 INTO ADJACENT BEAM WHERE `L' IS THE CLEAR SPAN OF THE ADJACENT BEAM.
33. ROOF SLOPE 1:40 SHALL BE ACHIEVED BY INCREASING THE HEIGHT OF MIDDLE COLUMN AND/OR BEAM SHALL BE CASTED FOLLOWING THE ROOF SLOPE .
34. ALL EXTERNAL WALLS SHALL BE PROVIDED WITH PCC BLOCK/BRICK WALL BELOW PLINTH BEAMS AS PER TYPICAL DETAILS.

⊗ This TD is issued to SULUR

SL No.	DATE	DESCRIPTIONS	INITIAL

REVISIONS

PUMP HOUSE/SUB STATION (83 SQM)

FDN. PLAN AT PLINTH LEVEL,LINTEL BEAMS,ROOF BEAMS SCHEDULE OF FOOTINGS, COLUMNS,PLINTH BEAMS, LINTEL BEAMS ROOF BEAMS,ROOF SLABS AND OTHER DETAILSREFERENCE TO DRGS.

DATE	04 AUG 2017	CHIEF ENGINEER AIR FORCE BANGALORE	SHT NO
DRN	P.RANJITH		1 / 1
TCD			
CKD			
SCALE	AS SHOWN	DRG.NO AFB / TD/383 / 2017 (S)	

DESIGNED BY :-	DESIGN CHECKED BY :-
Utsav (UTSAV KUMAR) MAJ SO II (DESIGN)	Nalin Singal (NALIN SINGAL, IDSE) DIRECTOR (DESIGN & PLG) For CHIEF ENGINEER

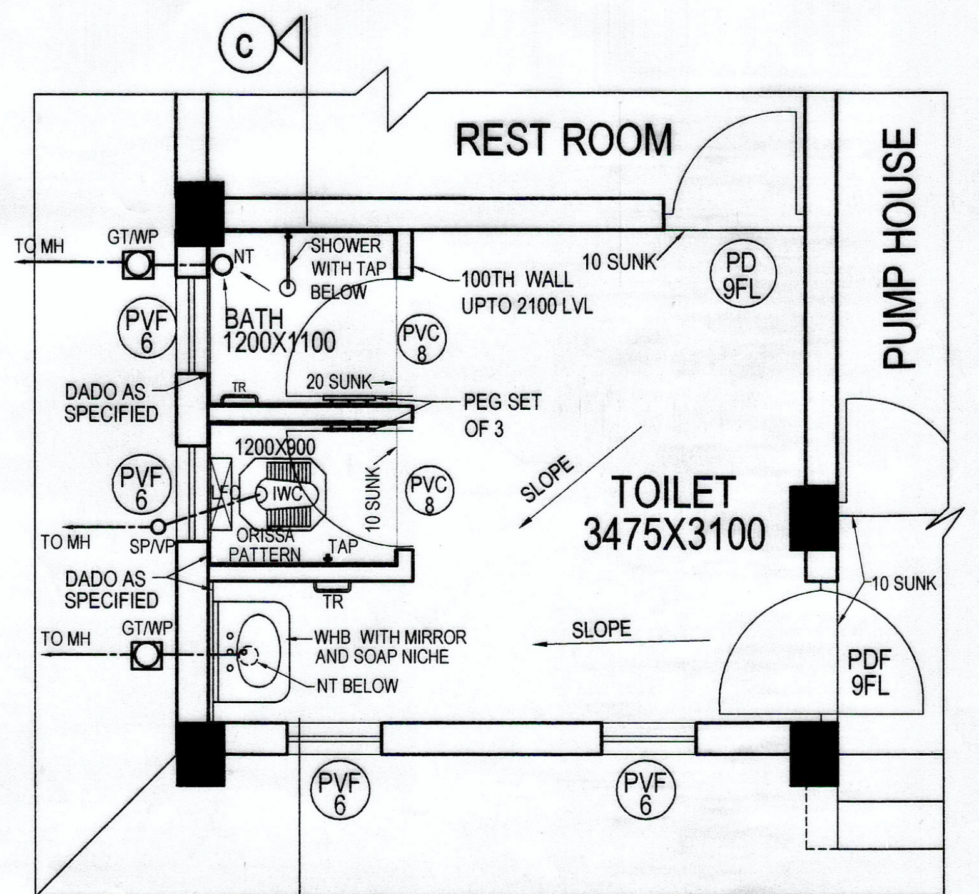
C
REST ROOM
PUMP HOUSE
TO MH
GT/WP
NT
SHOWER WITH TAP BELOW
100TH WALL UPTO 2100 LVL
10 SUNK
PD 9FL
PVF 6
BATH 1200X1100
PVC 8
DADO AS SPECIFIED
TR
20 SUNK
PEG SET OF 3
1200X900
IWC
LFC
ORISSA PATTERN
TAP
10 SUNK
SLOPE
TOILET 3475X3100
TO MH
SP/VP
DADO AS SPECIFIED
TR
TO MH
GT/WP
WHB WITH MIRROR AND SOAP NICHE
NT BELOW
SLOPE
10 SUNK
PDF 9FL
PVF 6
PVF 6
C

DETAIL PLAN OF TOILET

SCALE 1:50

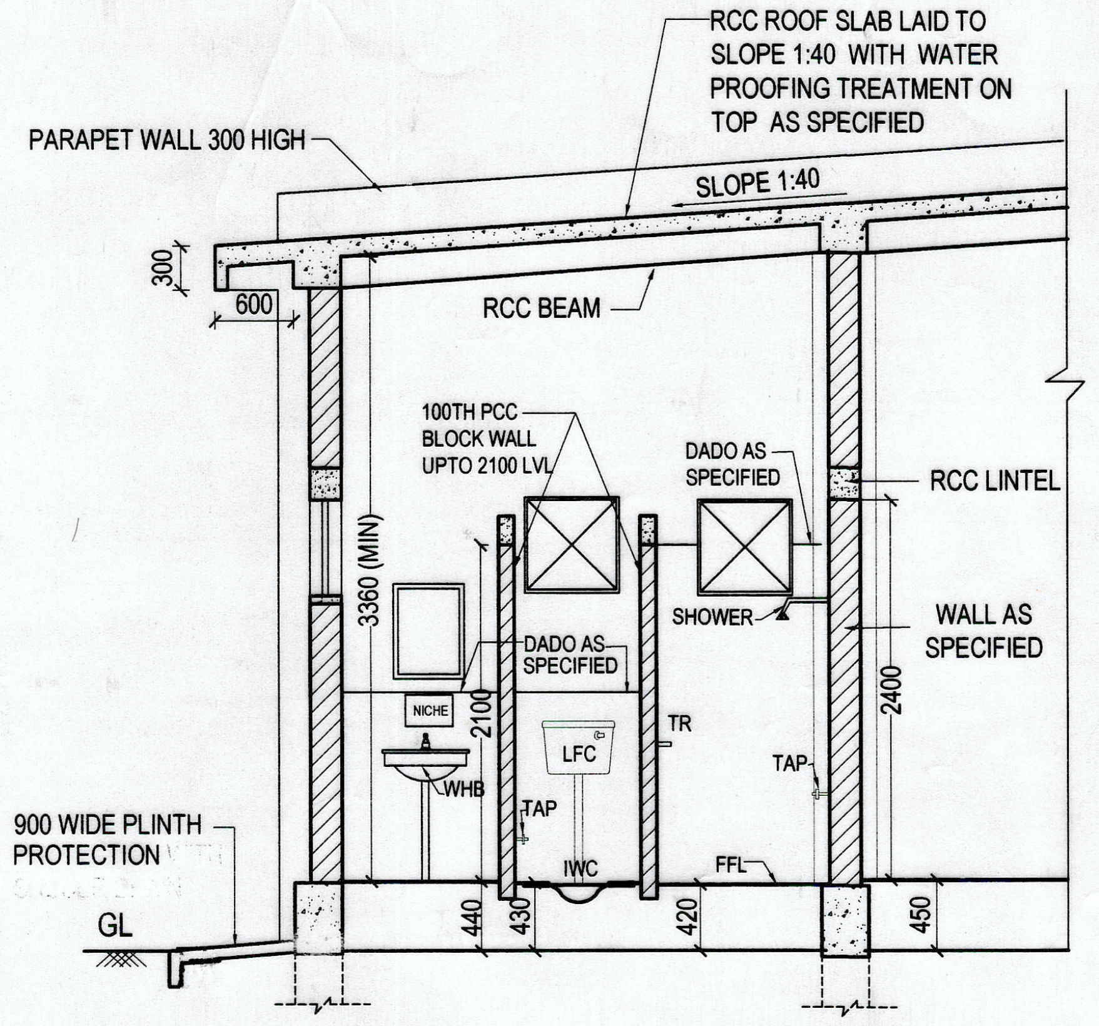
RCC ROOF SLAB LAID TO SLOPE 1:40 WITH WATER PROOFING TREATMENT ON TOP AS SPECIFIED
PARAPET WALL 300 HIGH
SLOPE 1:40
300
600
RCC BEAM
PUMP HOUSE
100TH PCC BLOCK WALL UPTO 2100 LVL
DADO AS SPECIFIED
RCC LINTEL
3360 (MIN)
SHOWER
WALL AS SPECIFIED
DADO AS SPECIFIED
NICHE
2100
LFC
TR
TAP
2400
WHB
TAP
900 WIDE PLINTH PROTECTION
IWC
FFL
GL
440
430
420
450

SECTION AT 'C-C'

SCALE 1:50

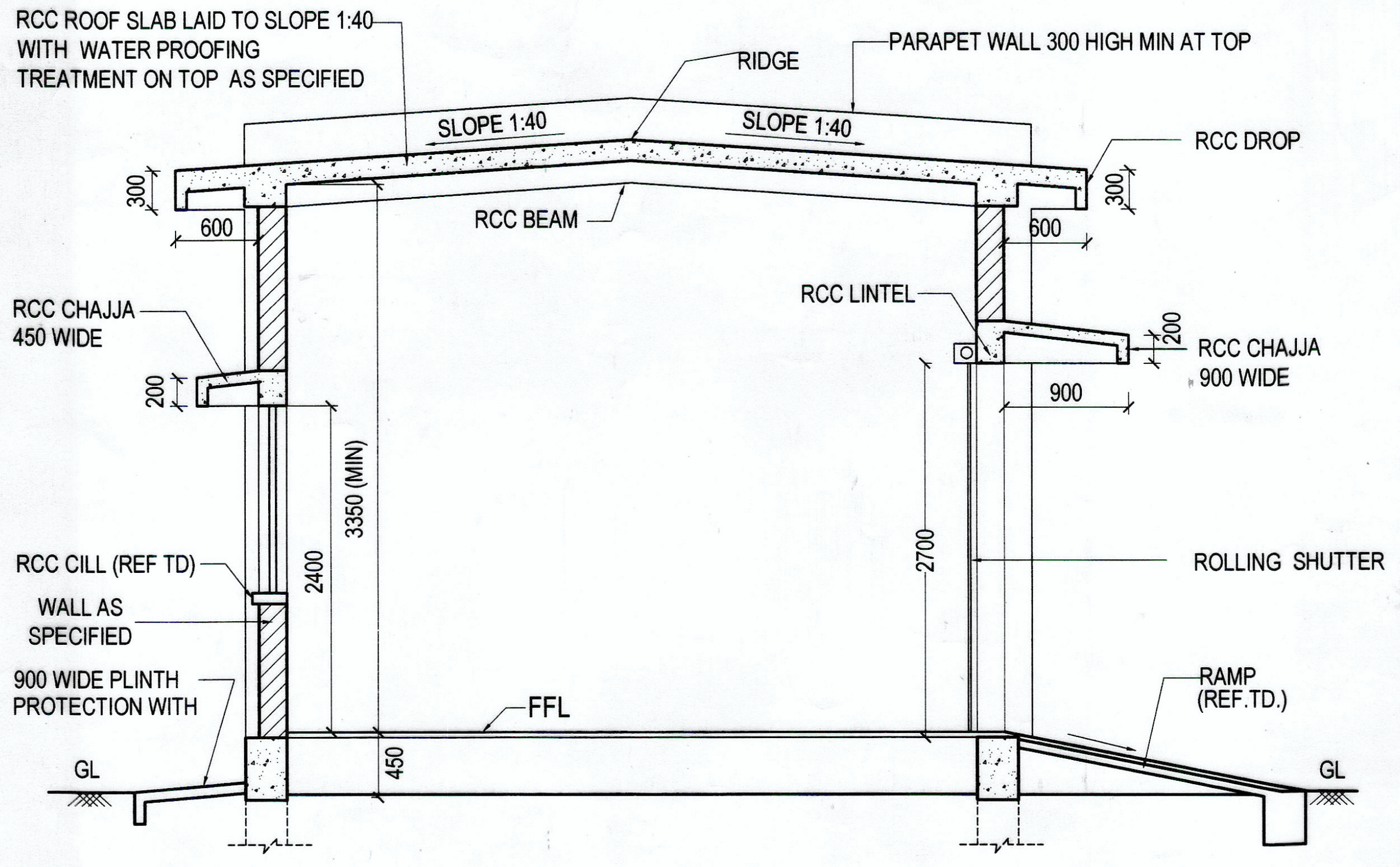
RCC ROOF SLAB LAID TO SLOPE 1:40 WITH WATER PROOFING TREATMENT ON TOP AS SPECIFIED
RIDGE
PARAPET WALL 300 HIGH MIN AT TOP
SLOPE 1:40
SLOPE 1:40
RCC DROP
300
600
RCC BEAM
600
300
RCC CHAJJA 450 WIDE
RCC LINTEL
200
RCC CHAJJA 900 WIDE
200
900
3350 (MIN)
2400
2700
ROLLING SHUTTER
RCC CILL (REF TD)
WALL AS SPECIFIED
900 WIDE PLINTH PROTECTION WITH
FFL
RAMP (REF.TD.)
GL
450
GL

SECTION AT 'B-B'

SCALE 1:50

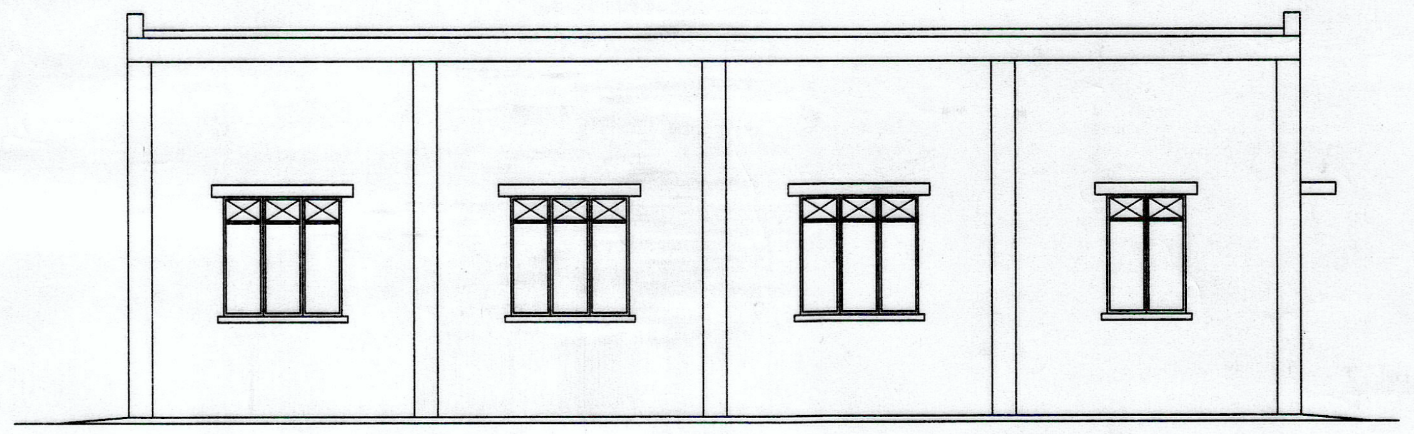

REAR ELEVATION

SCALE 1:100

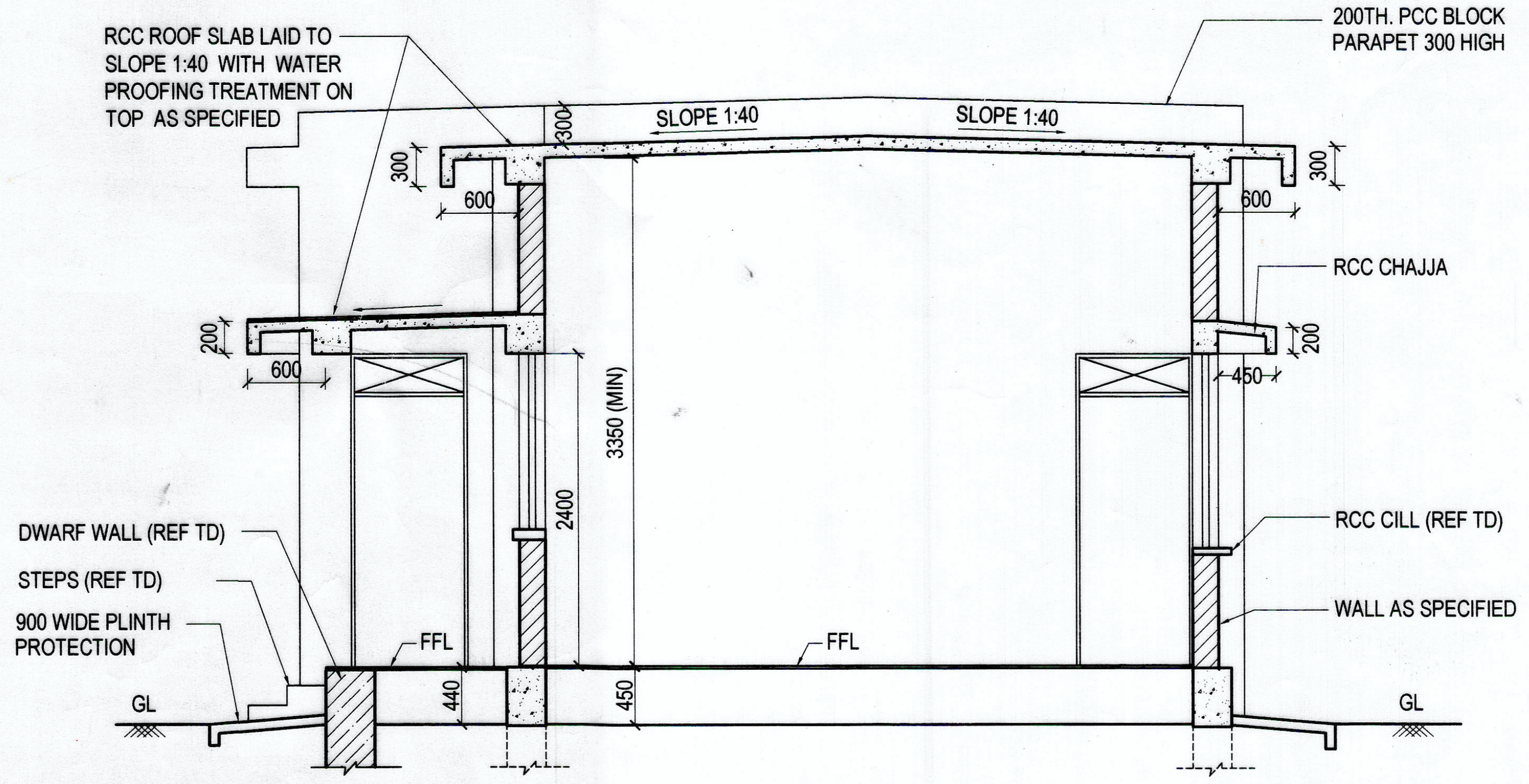
RCC ROOF SLAB LAID TO SLOPE 1:40 WITH WATER PROOFING TREATMENT ON TOP AS SPECIFIED
200TH. PCC BLOCK PARAPET 300 HIGH
SLOPE 1:40
SLOPE 1:40
300
300
600
600
300
RCC CHAJJA
200
600
200
450
3350 (MIN)
2400
RCC CILL (REF TD)
DWARF WALL (REF TD)
STEPS (REF TD)
900 WIDE PLINTH PROTECTION
WALL AS SPECIFIED
FFL
FFL
GL
440
450
GL

SECTION AT 'A-A'

SCALE 1:50

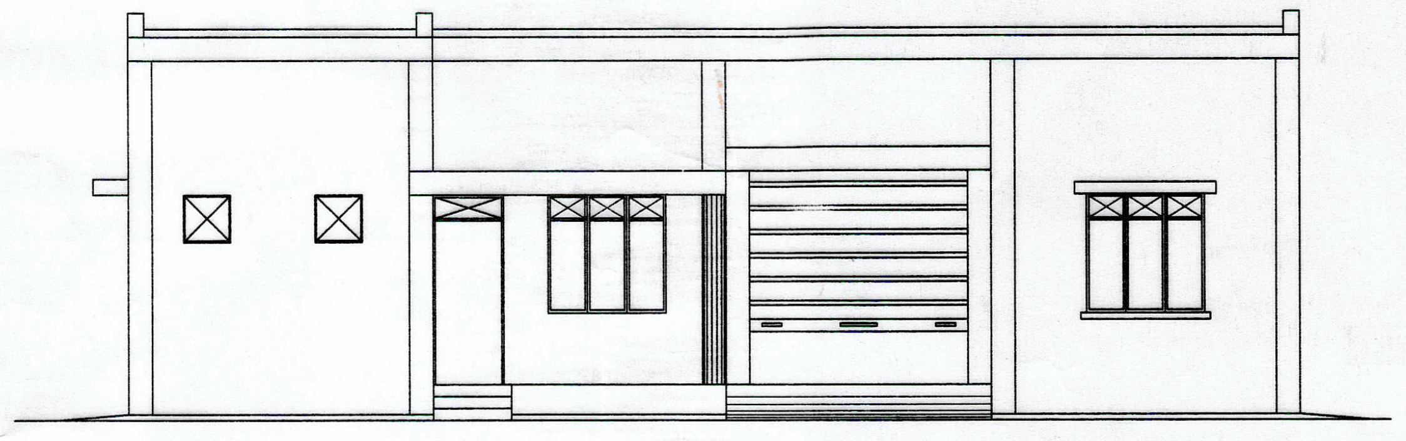

FRONT ELEVATION

SCALE 1:100

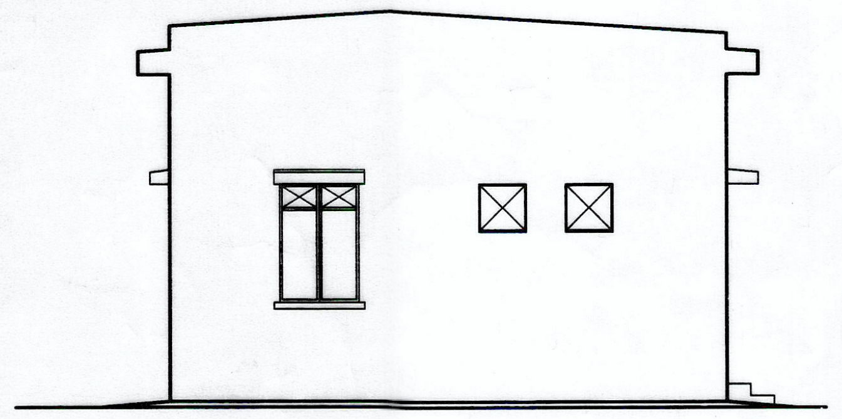

LEFT SIDE ELEVATION

SCALE 1:100

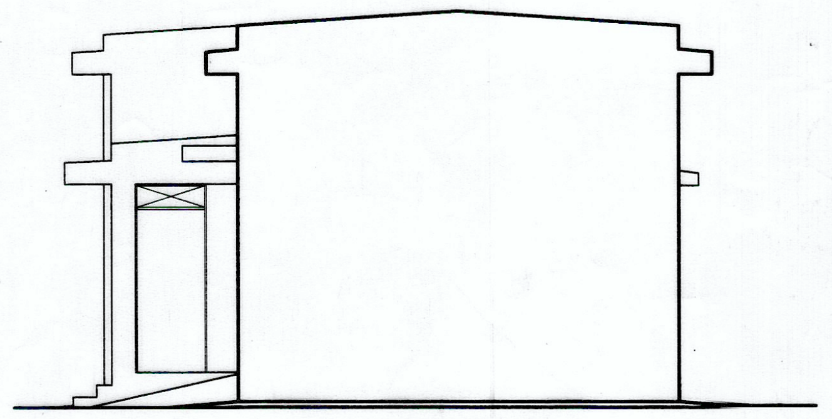

RIGHT SIDE ELEVATION

SCALE 1:100

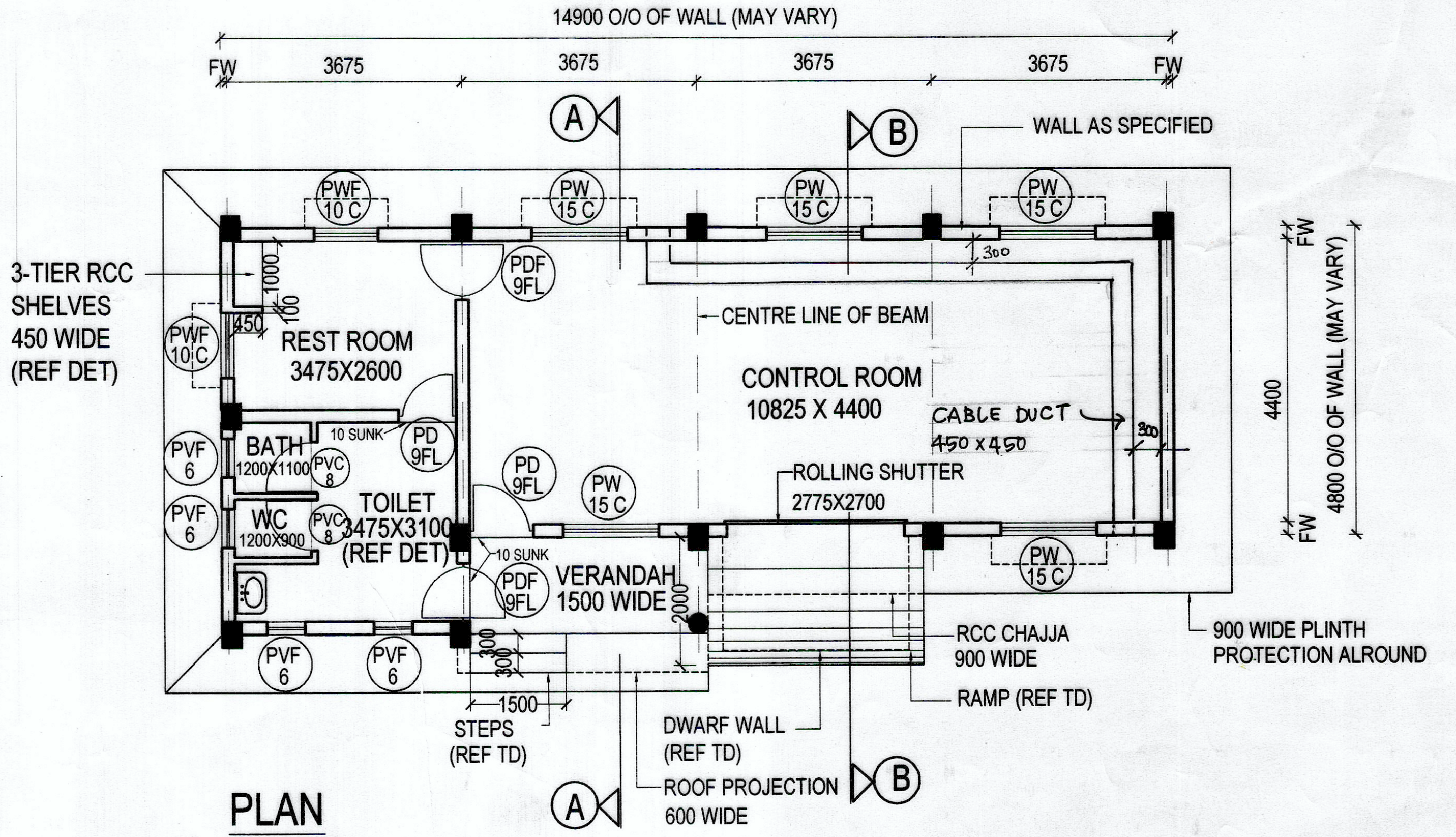
14900 O/O OF WALL (MAY VARY)
FW
3675
3675
3675
3675
FW
A
B
WALL AS SPECIFIED
PWF 10 C
PW 15 C
PW 15 C
PW 15 C
3-TIER RCC SHELVES 450 WIDE (REF DET)
1000
100
450
PDF 9FL
300
CENTRE LINE OF BEAM
PWF 10 C
REST ROOM 3475X2600
CONTROL ROOM 10825 X 4400
CABLE DUCT 450 x 450
300
4400
4800 O/O OF WALL (MAY VARY)
FW
FW
10 SUNK
PD 9FL
BATH 1200X1100
PVC 8
PVF 6
PD 9FL
PW 15 C
ROLLING SHUTTER 2775X2700
WC 1200X900
PVC 8
PVF 6
TOILET 3475X3100 (REF DET)
10 SUNK
PDF 9FL
VERANDAH 1500 WIDE
2000
PW 15 C
RCC CHAJJA 900 WIDE
900 WIDE PLINTH PROTECTION ALROUND
PVF 6
PVF 6
300
300
1500
STEPS (REF TD)
RAMP (REF TD)
DWARF WALL (REF TD)
ROOF PROJECTION 600 WIDE
A
B

PLAN

SCALE 1:100

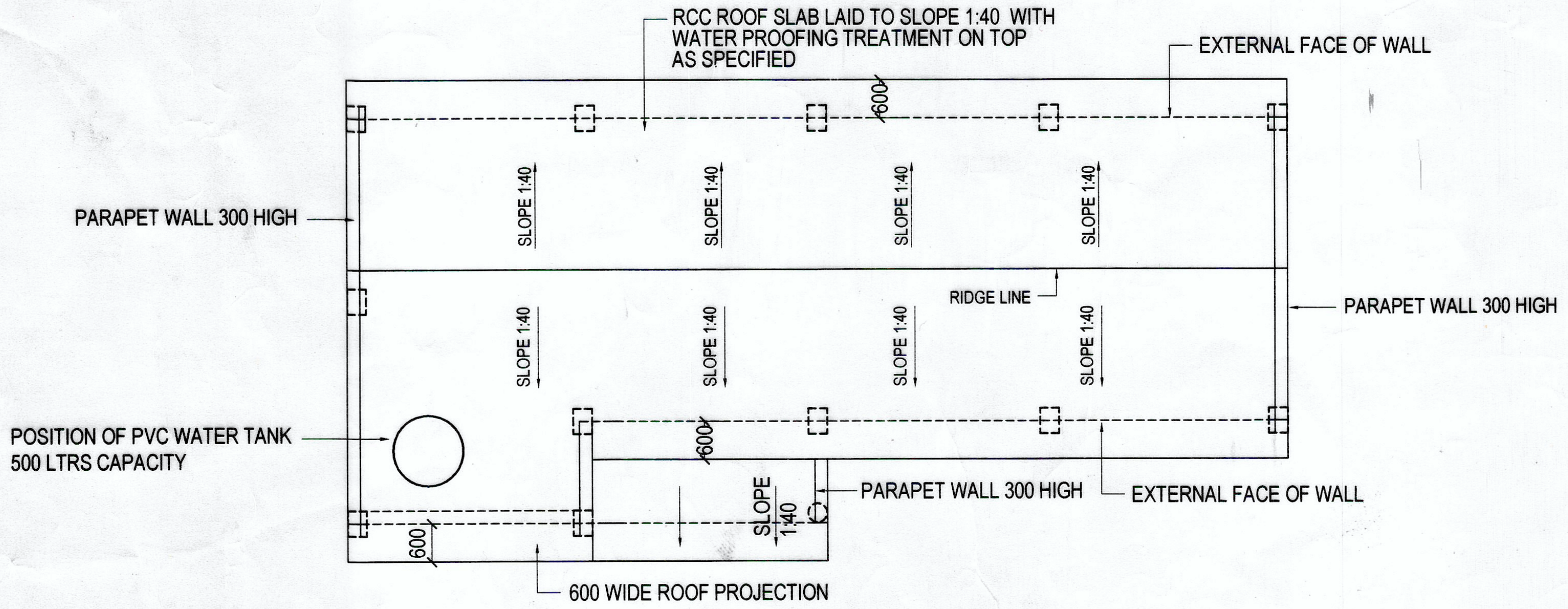
RCC ROOF SLAB LAID TO SLOPE 1:40 WITH WATER PROOFING TREATMENT ON TOP AS SPECIFIED
EXTERNAL FACE OF WALL
600
PARAPET WALL 300 HIGH
SLOPE 1:40
SLOPE 1:40
SLOPE 1:40
SLOPE 1:40
RIDGE LINE
PARAPET WALL 300 HIGH
SLOPE 1:40
SLOPE 1:40
SLOPE 1:40
SLOPE 1:40
POSITION OF PVC WATER TANK 500 LTRS CAPACITY
600
SLOPE 1:40
PARAPET WALL 300 HIGH
EXTERNAL FACE OF WALL
600
600 WIDE ROOF PROJECTION

ROOF PLAN

SCALE 1:100

REFERENCE TO DRAWINGS

S.NO	DESCRIPTION	DRG NO	SHT NO
1	TYPICAL DETAILS OF STEEL WINDOWS AND VENTILATORS	AFB / TD / 003 / (R)	1/12 TO 12/12
2	MISCALLANEOUS DETAILS	AFB / TD / 019	1/3 TO 3/3
3	DETAILS OF FORMAT	AFB / TD / 022	1/1
4	ARCHITECTURAL NORMS FOR FIXING HEIGHTS OF LAVATORY AND KITCHEN FITTINGS	AFB / TD / 028	1/1
5	TY DETAILS OF VALVE CHAMBER	AFB / TD / 056	1/1
6	BATH/WC/ TOILET FITTINGS	AFB / TD /031	1/4 TO 4/4
7	DETAILS OF LEAKAGE & SEEPAGE PREVENTION CURE	AFB/TD/039	1/3 TO 3/3
8	TY DETAILS OF CIMS BOX FOR FAN HOOK AND MS SWITCH CUP BOARD	AFB / TD / 057	1/1
9	TYPICAL DETAILS OF WIRE CLOTH IN JUNCTION BETWEEN RCC BEAM / RCC COLUMN / WALL	AFB / TD / 062	1/1
10	FIXING DETAILS OF P V C WATER TANK	AFB / TD / 130	1/1
11	REINFORCEMENT DETAILING FOR DUCTILITY - EARTH QUAKE RESISTANT CONSTRUCTION FOR ZONE III, IV & V STATIONS & ZONE II STATIONS	AFB/TD/222/04(S)(R)	1/1 ✓
12	FIXING DETAILS OF EXHAUST FAN	AFB / TD / 224/04	1/1
13	NOTES FOR RCC FRAMED STRUCTURES	AFB / TD / 230/2018 (S) (R)	1/1 ✓
14	TY DETAILS OF FDNS,BEAMS,SLABS, TRAP NICHE, SCHEDULE OF LINTELS & OTHER MISCELLANEOUS DETAILS	AFB/TD/231/2018 (S) (R)	1/2 & 2/2 ✓
15	WATER SUPPLY SYSTEM FOR CONCRETE MIXER	AFB / TD / 233 / 05	1/1
16	PROVN. OF WATE PROOFING TREATMENT FOR DIFFERENT TYPES OF ROOF	AFB / TD / 402 /18(S)	1/1 ✓
17	DETAILS OF LINTEL AT JUNCTION, RCC STAGING AND RAISED PLATFORM.	AFB/TD/333/2018 / (S) (R)	1/1 ✓
18	TYPICAL DETAILS OF PVC MOULDED DOOR	AFB / TD / 340 (R) / 2012	1/1
19	DETAILS OF PANELED & FLY PROOF DOORS WITH WOODEN / PRESS STEEL FRAME	AFB / TD / 001	1/6 TO 6/6

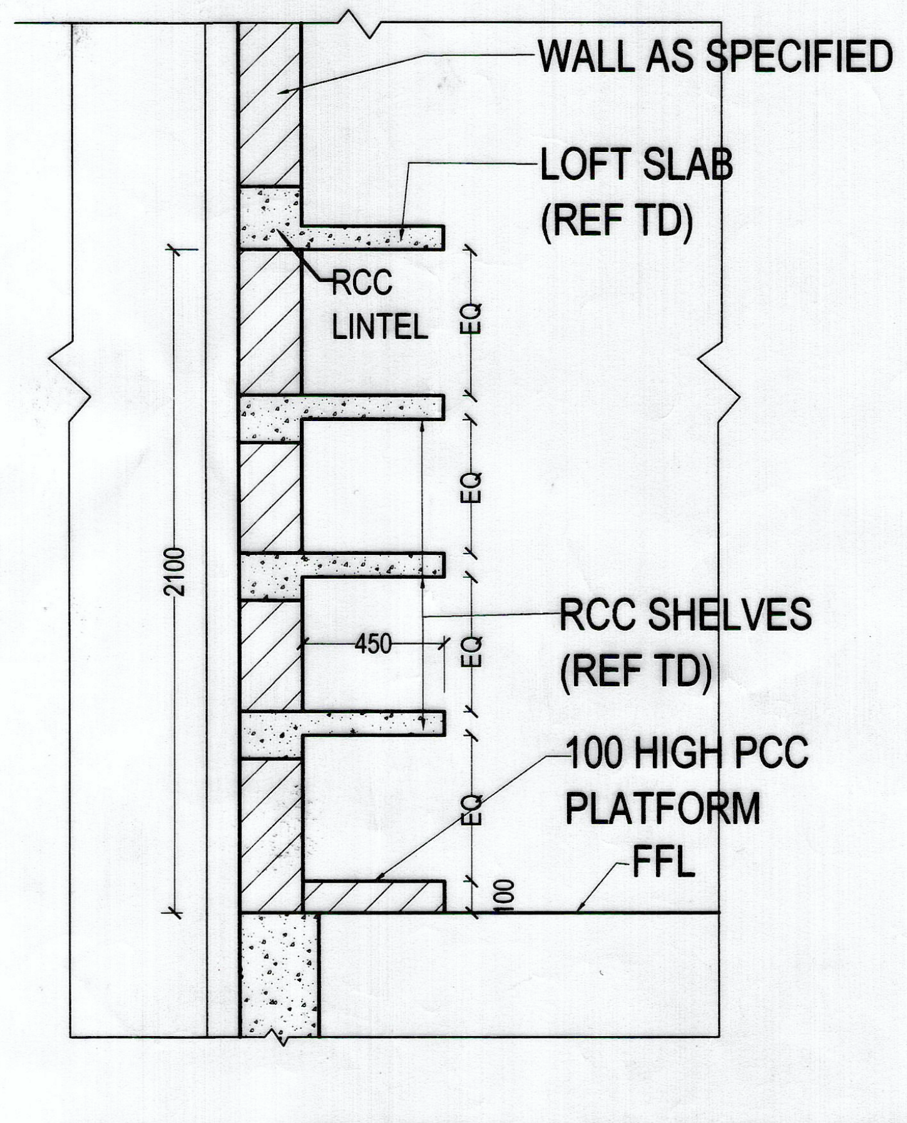
WALL AS SPECIFIED
LOFT SLAB (REF TD)
RCC LINTEL
EQ
EQ
2100
450
RCC SHELVES (REF TD)
EQ
100 HIGH PCC PLATFORM
EQ
100
FFL

DETAIL OF 3 TIER RCC SHELVES

SCALE - 1:25

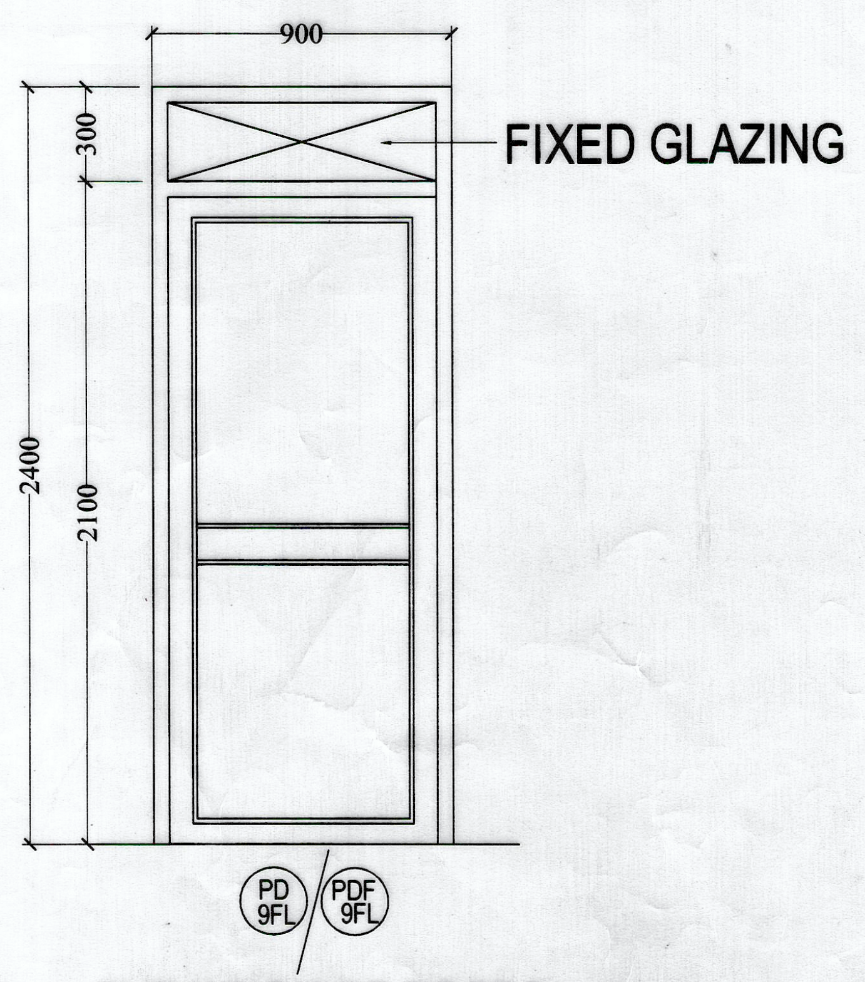
900
300
FIXED GLAZING
2400
2100
PD 9FL
PDF 9FL

ELEVATION OF DOORS

NOTE ALL OTHER DETAILS OF DOORS SHALL BE FOLLOWED FROM DRG.NO:-AFB/TD/001 SHT.NO:-1/6- 6/6

NOTES

1 CONTRACTOR TO CHECK AND VERIFY ALL DIMENSIONS BEFORE EXECUTION OF THE WORK.

2 FIGURED DIMENSIONS SHALL BE FOLLOWED.

3 ALL DIMENSIONS ARE GIVEN IN MILLIMETRES UNLESS OTHERWISE SPECIFIED.

4 EXECUTIVE AUTHORITY SHALL CHECK THIS DRG.BEFORE TAKING EXECUTION IN HAND.

5 GROUND LEVEL SHOWN IN THE DRGS. IS THE FINISHED GROUND LEVEL TO WHICH NATURAL .GROUND LEVEL SHALL BE CUT / FILLED AS DIRECTED BY THE ENGINEER - IN - CHARGE.

6 DETAILS BELOW FFL SHALL BE AS PER STRUCTURAL DRAWINGS

7 FORMAT FOR MARKING OF BLDG.NO SHALL BE OF GRANITE SLAB AS PER TD AND THE SAME SHALL BE PROVIDED AT A LOCATION DECIDED BY THE ENGINEER-IN-CHARGE .

8 RCC CILL SHALL BE PROVIDED FOR ALL WINDOWS AS SHOWN IN DRGS.

9 GUARD BARS SHALL BE PROVIDED TO ALL WINDOWS /VENTILATORS EXCEPT ALUMINIUM WINDOWS/ VENTILATORS

10 PEG SET OF THREE SHALL BE PROVIDED IN ALL IWC , EWCS AND BATH FOR ALL TOILETS WHETHER SHOWN OR NOT SHOWN IN THE DRGS.

11 THE SIZE OF COLUMNS, PLINTH BEAMS, BEAMS & STRUCTURAL DETAILS WHETHER SHOWN OR NOT IN ARCH. DRGS SHALL BE FOLLOWED AS PER STRUCTURAL DRGS.

12 DPC SHALL BE PROVIDED TO WALLS BELOW GROUND FLOOR LEVEL WHEREEVER APPLICABLE.

13 100 TH. PCC SOLID BLOCK OR FLY ASH WALLS /115TH BRICK WALLS SHALL BE REST DIRECTLY ON PCC SUB BASE / RCC SLAB.

14 ROOF HEIGHT HAS BEEN SHOWN FROM FFL TO TOP OF RCC SLAB EXCLUDING WATER PROOFING TREATMENT.

15 ALL INTERNAL PLASTER EDGES SHALL BE ROUNDED OFF .

16 SKIRTING / DADO SHALL BE TURNED TO CILL / JAMB .

17 VENT PIPE `**VP**' SHALL BE TAKEN 900 HT ABOVE ROOF.

18 ALL EXPOSED EDGES OF STEPS, PLATFORM SHALL BE PROVIDED WITH BULL NOSING OF SPECIFIED FINISH.

19 FOR BRICK CONSTRUCTION ,WALL THICKNESS SHALL BE 230 MM AND FOR PCC BLOCK / ~~FLY ASH BRICK~~ CONSTRUCTION, WALL THICKNESS SHALL BE 200 MM.

20 THE SANITARY / WATER PIPES SHALL BE PROVIDED AS PER DETAIL DRGS./ TYPICAL DETAIL DRGS.WHETHER SHOWN OR NOT IN THE ELEVATIONS AND SECTIONS.

21 THIS DRAIWNG IS SUPERCEDED BY AFB/TD/383/2017 Sht No 1/2.
DATED 04 AUG 2017

PUMP HOUSE/SUB STATION (83 SQM)

PLAN, ELEVATIONS, SECTIONS AND OTHER DETAILS

DATE	18 SEP 2019	CHIEF ENGINEER (AIR FORCE) BANGALORE	SHT. NO
DRN	BALRAJ D N		1R/2
TCD	–		
CKD	–		
SCALE	AS SHOWN	REF DRG NO: AFB / TD / 383 / 2019	

V. RAMAMURTHY
AAD (ARCH)

ROHINI R KATKAR
Offg. DIR (ARCH)
FOR CHIEF ENGINEER

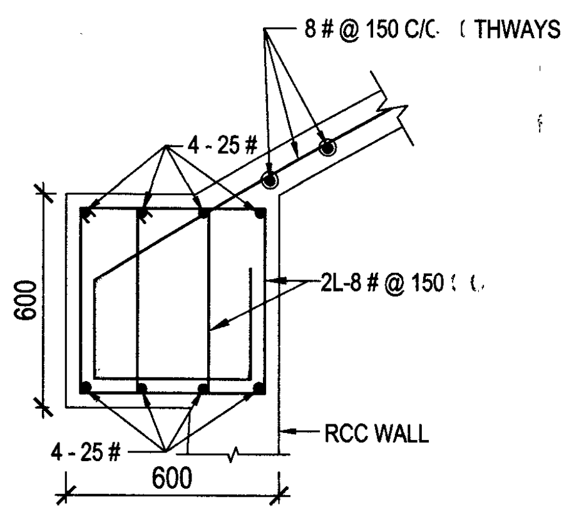
8 # @ 150 C/C BOTHWAYS
4 - 25 #
2L-8 # @ 150 C/C
600
4 - 25 #
RCC WALL
600

DETAIL OF TOP RING BEAM
(SCALE-01:20)

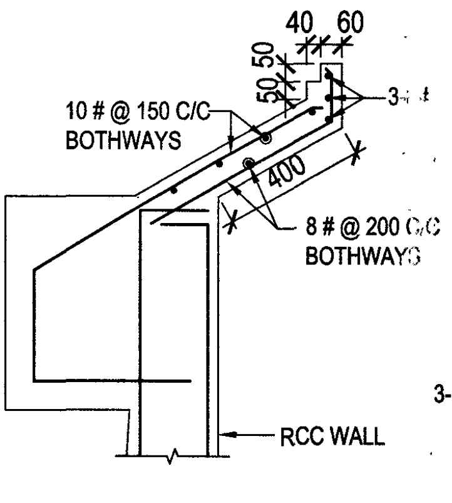
40 60
50 50
3-8 #
10 # @ 150 C/C BOTHWAYS
400
8 # @ 200 C/C BOTHWAYS
RCC WALL

DETAIL AT Ⓐ
(SCALE-01:20)

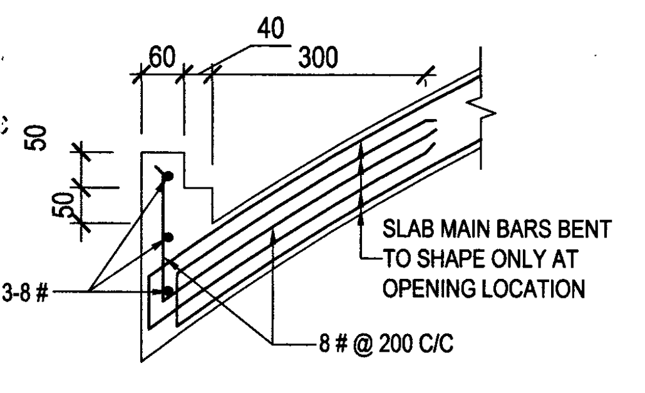
60
40
300
50
50
3-8 #
SLAB MAIN BARS BENT TO SHAPE ONLY AT OPENING LOCATION
8 # @ 200 C/C

DETAIL AT Ⓑ
(SCALE-01:10)

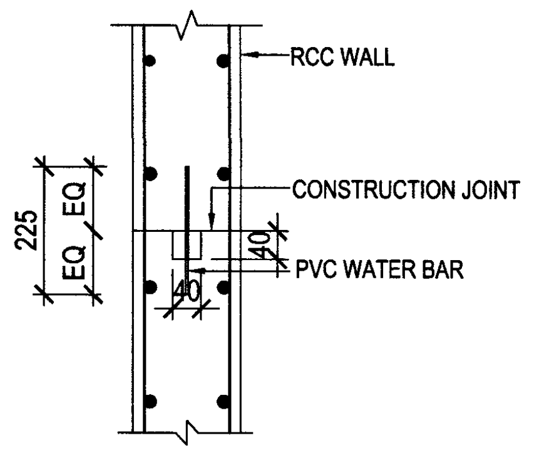
RCC WALL
225
EQ
EQ
CONSTRUCTION JOINT
40
40
PVC WATER BAR

CONSTRUCTION JOINT (TYP)
(SCALE-01:10)

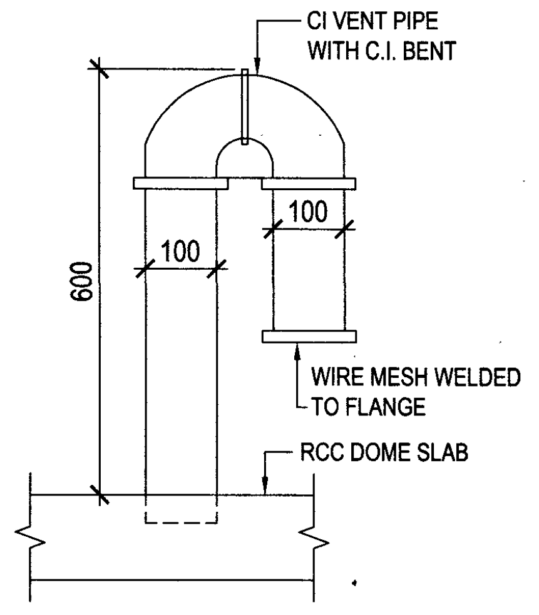
CI VENT PIPE WITH C.I. BENT
600
100
100
WIRE MESH WELDED TO FLANGE
RCC DOME SLAB

DETAIL OF VENT PIPE (VP)
(SCALE-01:10)

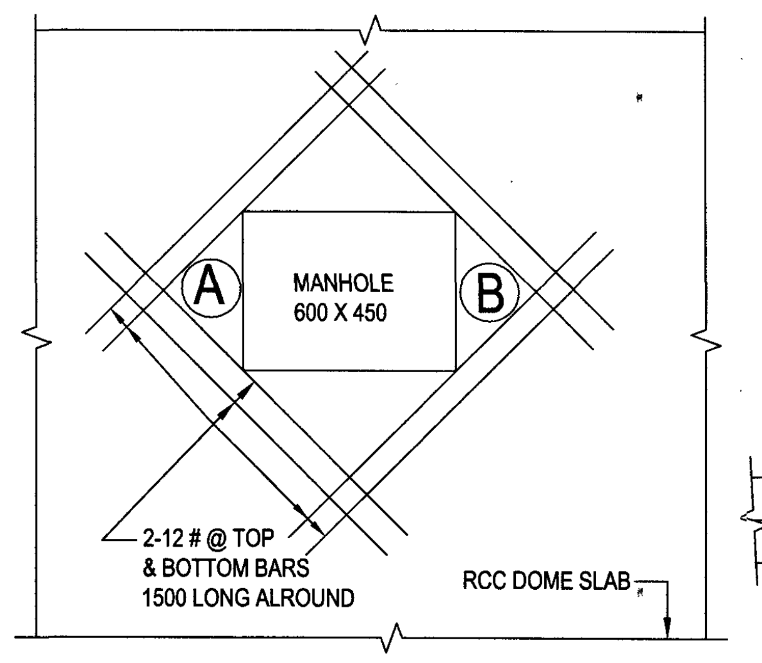
A
MANHOLE 600 X 450
B
2-12 # @ TOP & BOTTOM BARS 1500 LONG ALROUND
RCC DOME SLAB

DETAIL OF EXTRA REIN. AT MH OPENING

SCHEDULE OF UG SUMP							
SL No.	H	D	L1	L2	CAPACITY IN LTRS	CAPACITY IN GLNS	
1.	4000	15000	600	1000	7,00,000	1,54,000	
2.	4000	14000	550	950	6,00,000	1,32,000	
3.	4000	13000	500	900	5,00,000	1,10,000	
4.	4000	12000	450	850	4,00,000	88,000	
5.	4000	10000	450	800	3,00,000	66,000	
6.	4000	8000	450	750	2,00,000	44,000	
7.	3000	7000	400	700	1,00,000	22,000	

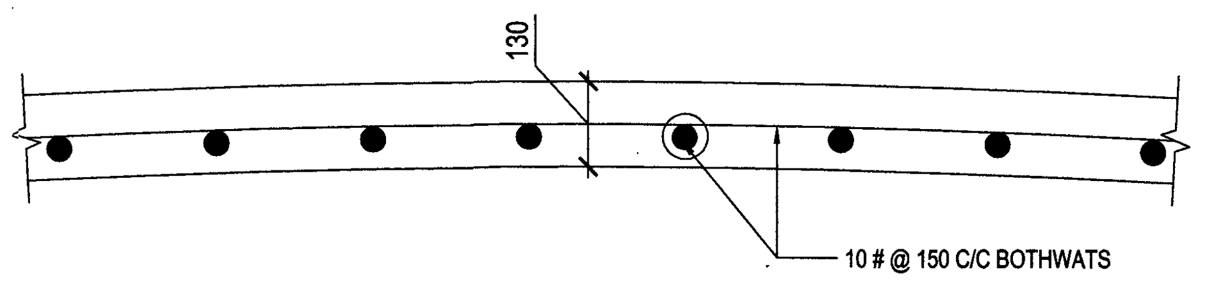
130
10 # @ 150 C/C BOTHWATS

DETAIL OF RCC DOME SLAB
(SCALE-01:10)

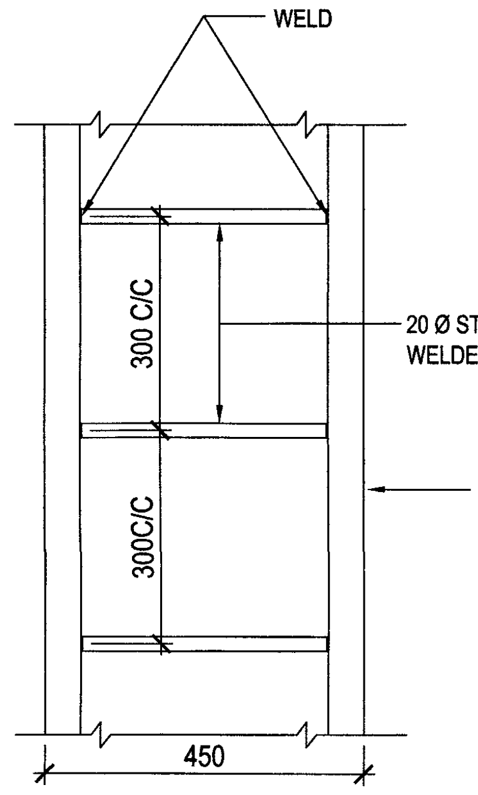
WELD
300 C/C
300C/C
20 Ø STEEL PIPE WELDED TO 50 Ø SS PIPE
450

ELEVATION
(SCALE-01:10)

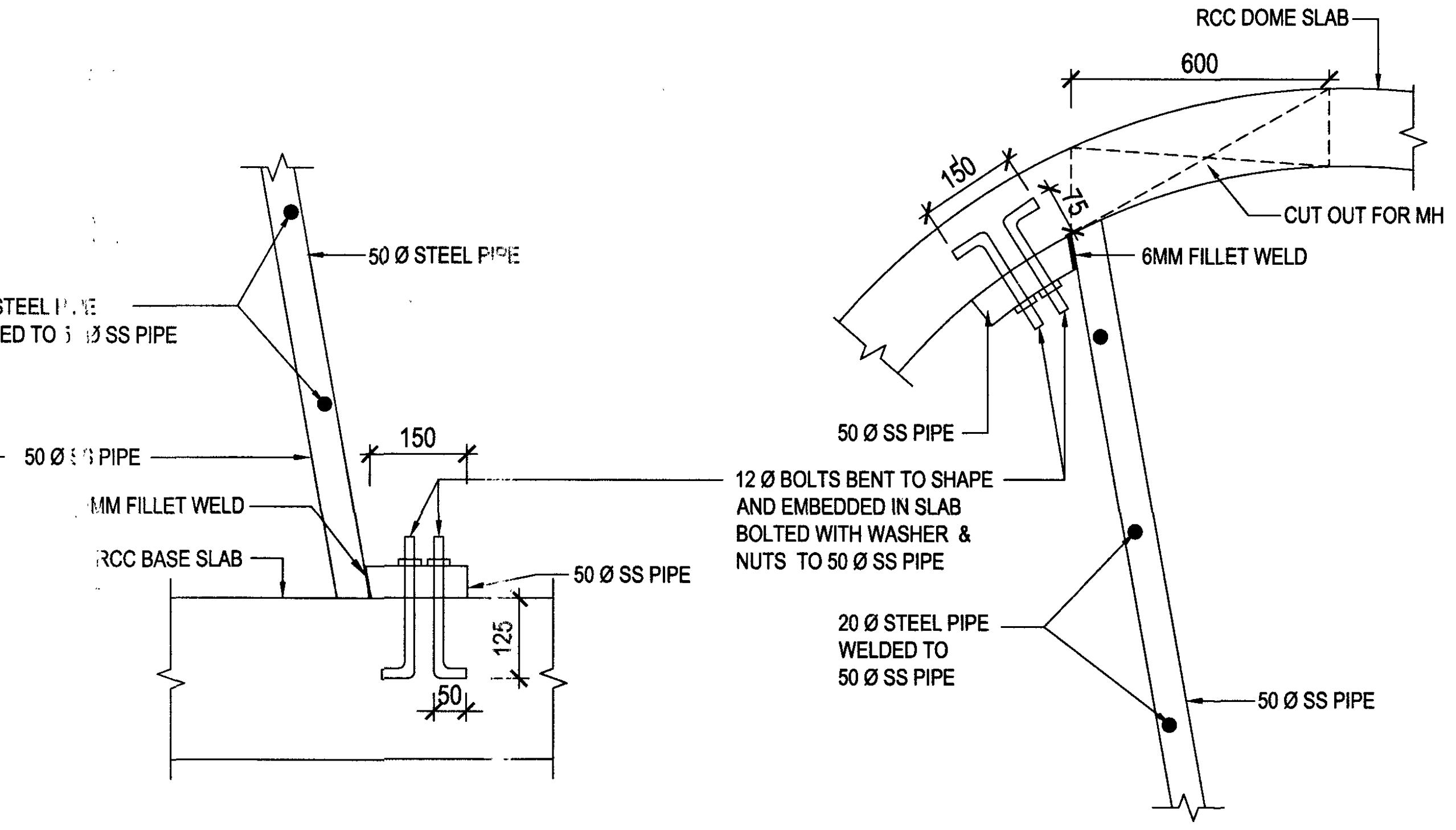
50 Ø SS PIPE
50 Ø STEEL PIPE
6MM FILLET WELD
RCC BASE SLAB
150
50 Ø SS PIPE
125
50
RCC DOME SLAB
600
150
75
CUT OUT FOR MH
6MM FILLET WELD
50 Ø SS PIPE
12 Ø BOLTS BENT TO SHAPE AND EMBEDDED IN SLAB BOLTED WITH WASHER & NUTS TO 50 Ø SS PIPE
20 Ø STEEL PIPE WELDED TO 50 Ø SS PIPE
50 Ø SS PIPE

FIXING DETAIL OF STEEL LADDER
(SCALE-01:10)

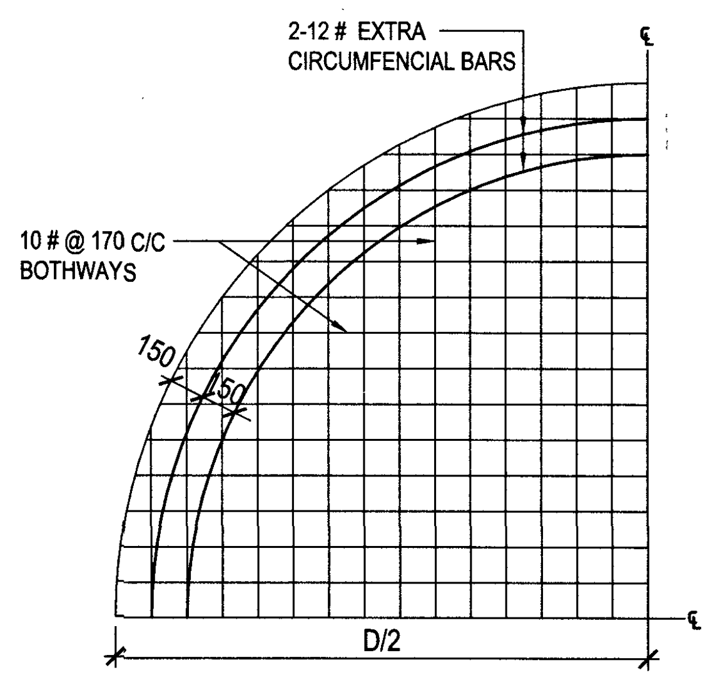
2-12 # EXTRA CIRCUMFENCIAL BARS
℄
10 # @ 170 C/C BOTHWAYS
150
150
D/2
℄

TOP FACE OF BOTTOM SLAB

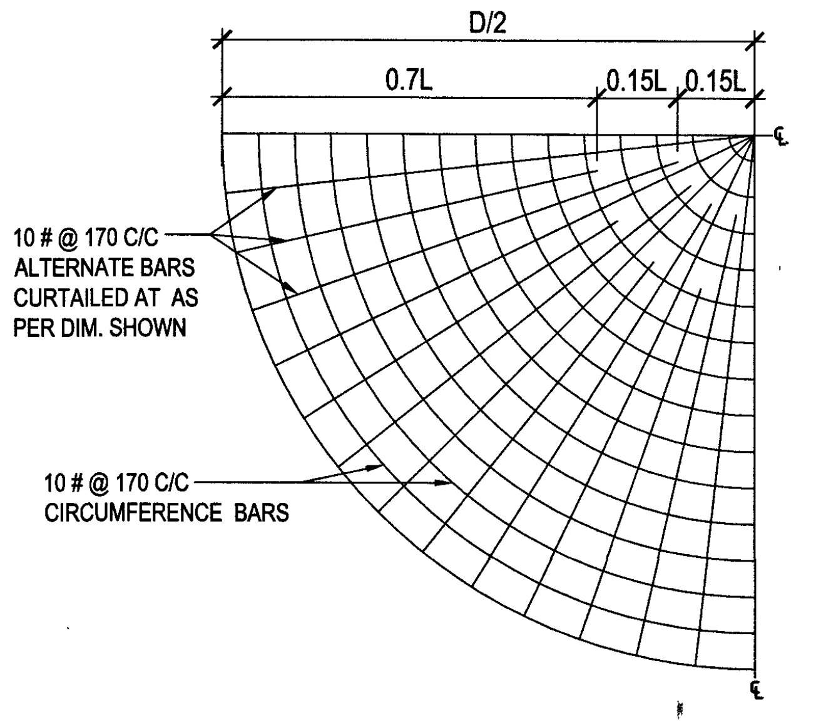
D/2
0.7L
0.15L
0.15L
℄
10 # @ 170 C/C ALTERNATE BARS CURTAILED AT AS PER DIM. SHOWN
10 # @ 170 C/C CIRCUMFERENCE BARS
℄

BOTTOM FACE OF BOTTOM SLAB

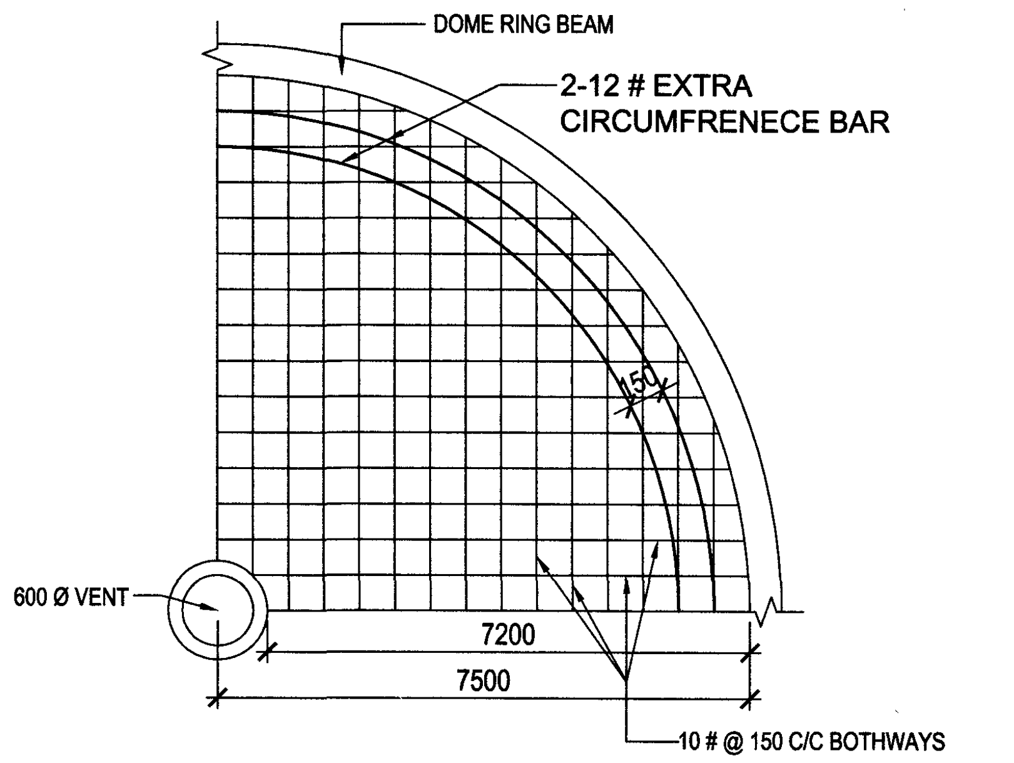
DOME RING BEAM
2-12 # EXTRA CIRCUMFRENECE BAR
150
600 Ø VENT
7200
7500
10 # @ 150 C/C BOTHWAYS

PLAN OF TOP SLAB

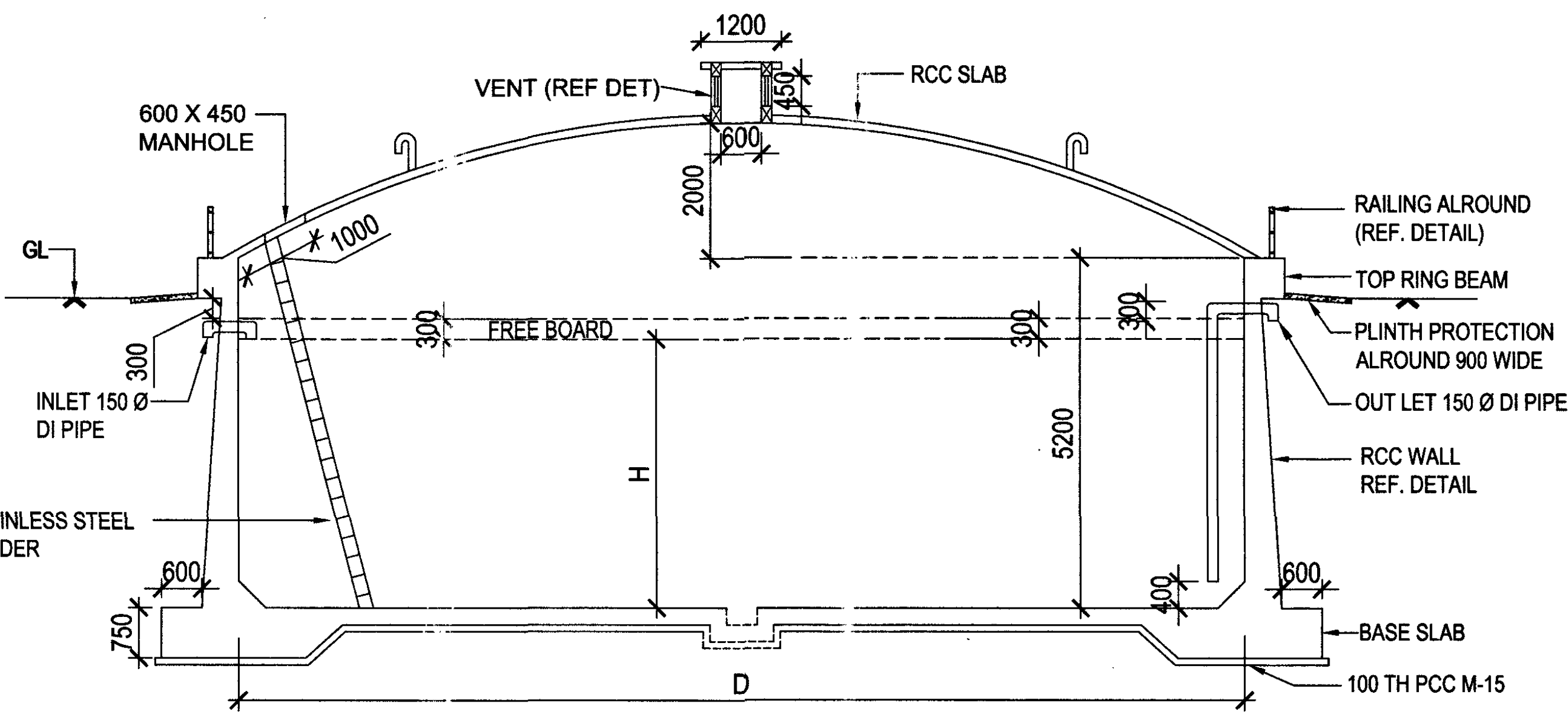
1200
VENT (REF DET)
450
RCC SLAB
600 X 450 MANHOLE
600
2000
1000
GL
RAILING ALROUND (REF. DETAIL)
TOP RING BEAM
300
FREE BOARD
300
300
PLINTH PROTECTION ALROUND 900 WIDE
INLET 150 Ø DI PIPE
OUT LET 150 Ø DI PIPE
H
5200
RCC WALL REF. DETAIL
STAINLESS STEEL LADDER
600
400
600
750
BASE SLAB
D
100 TH PCC M-15

SECTION AT 'A-A'
(SCALE-01:100)

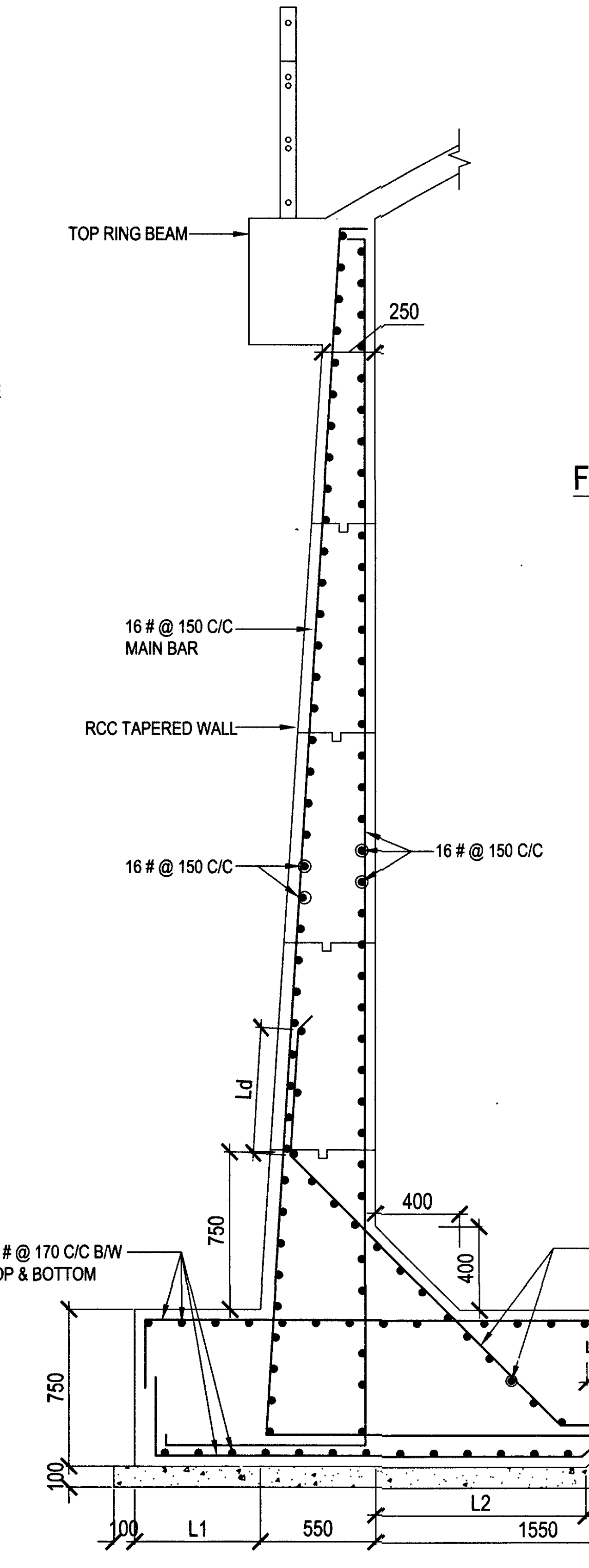
TOP RING BEAM
250
16 # @ 150 C/C MAIN BAR
RCC TAPERED WALL
16 # @ 150 C/C
16 # @ 150 C/C
Ld
750
400
400
16 # @ 150 C/C
10 # @ 170 C/C B/W TOP & BOTTOM
Ld
Ld
10 # @ 170 C/C B/W TOP & BOTTOM
750
100
500
100
L1
550
L2
1550

STRUCTURAL DETAIL OF U/G SUMP
(SCALE-01:25)

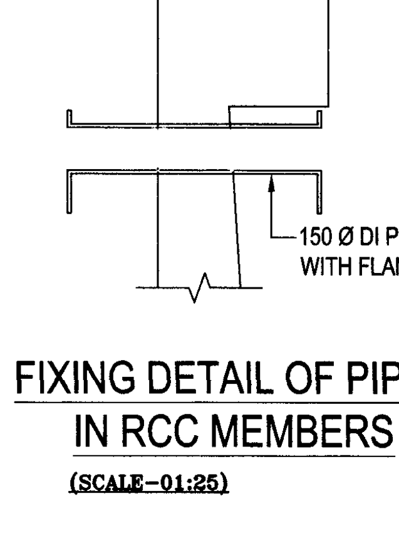
150 Ø DI PIPE WITH FLANGE

FIXING DETAIL OF PIPES IN RCC MEMBERS
(SCALE-01:25)

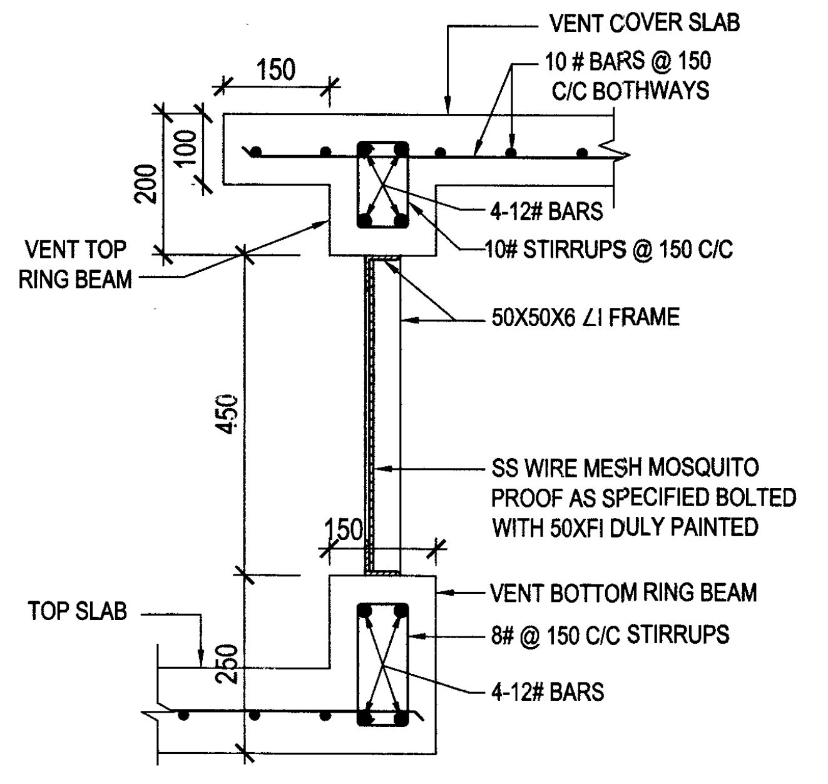
VENT COVER SLAB
150
10 # BARS @ 150 C/C BOTHWAYS
200
100
4-12# BARS
10# STIRRUPS @ 150 C/C
VENT TOP RING BEAM
50X50X6 ∠I FRAME
450
SS WIRE MESH MOSQUITO PROOF AS SPECIFIED BOLTED WITH 50XFI DULY PAINTED
150
VENT BOTTOM RING BEAM
TOP SLAB
8# @ 150 C/C STIRRUPS
250
4-12# BARS

SECTION AT 'H-H'
(SCALE-01:10)

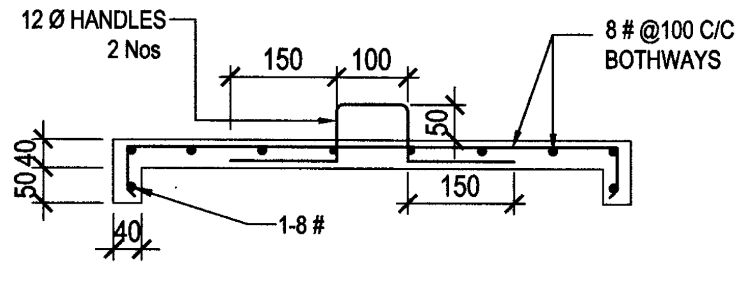
12 Ø HANDLES 2 Nos
150
100
8 # @100 C/C BOTHWAYS
50
50 40
150
1-8 #
40

M H COVER SLAB
(SCALE-01:10)

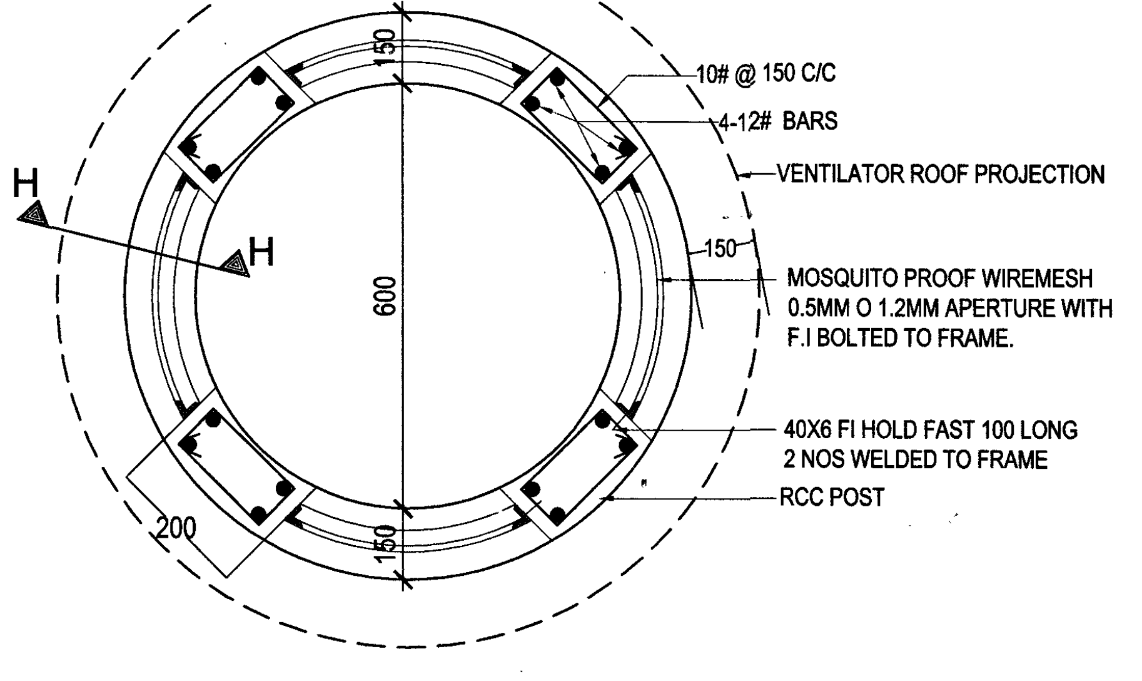
150
10# @ 150 C/C
4-12# BARS
VENTILATOR ROOF PROJECTION
H
H
600
150
MOSQUITO PROOF WIREMESH 0.5MM O 1.2MM APERTURE WITH F.I BOLTED TO FRAME.
40X6 FI HOLD FAST 100 LONG 2 NOS WELDED TO FRAME
RCC POST
200
150

PLAN OF VENT
SCALE 1:10

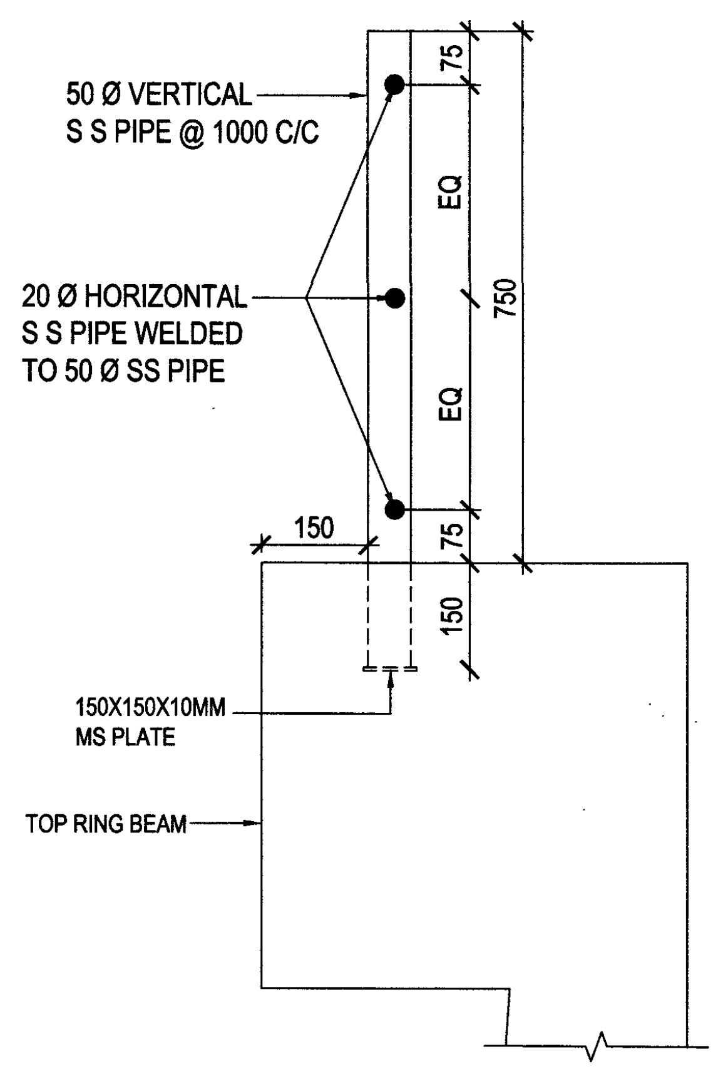
75
50 Ø VERTICAL S S PIPE @ 1000 C/C
EQ
750
20 Ø HORIZONTAL S S PIPE WELDED TO 50 Ø SS PIPE
EQ
150
75
150
150X150X10MM MS PLATE
TOP RING BEAM

DETAIL OF RAILING
(SCALE-01:10)

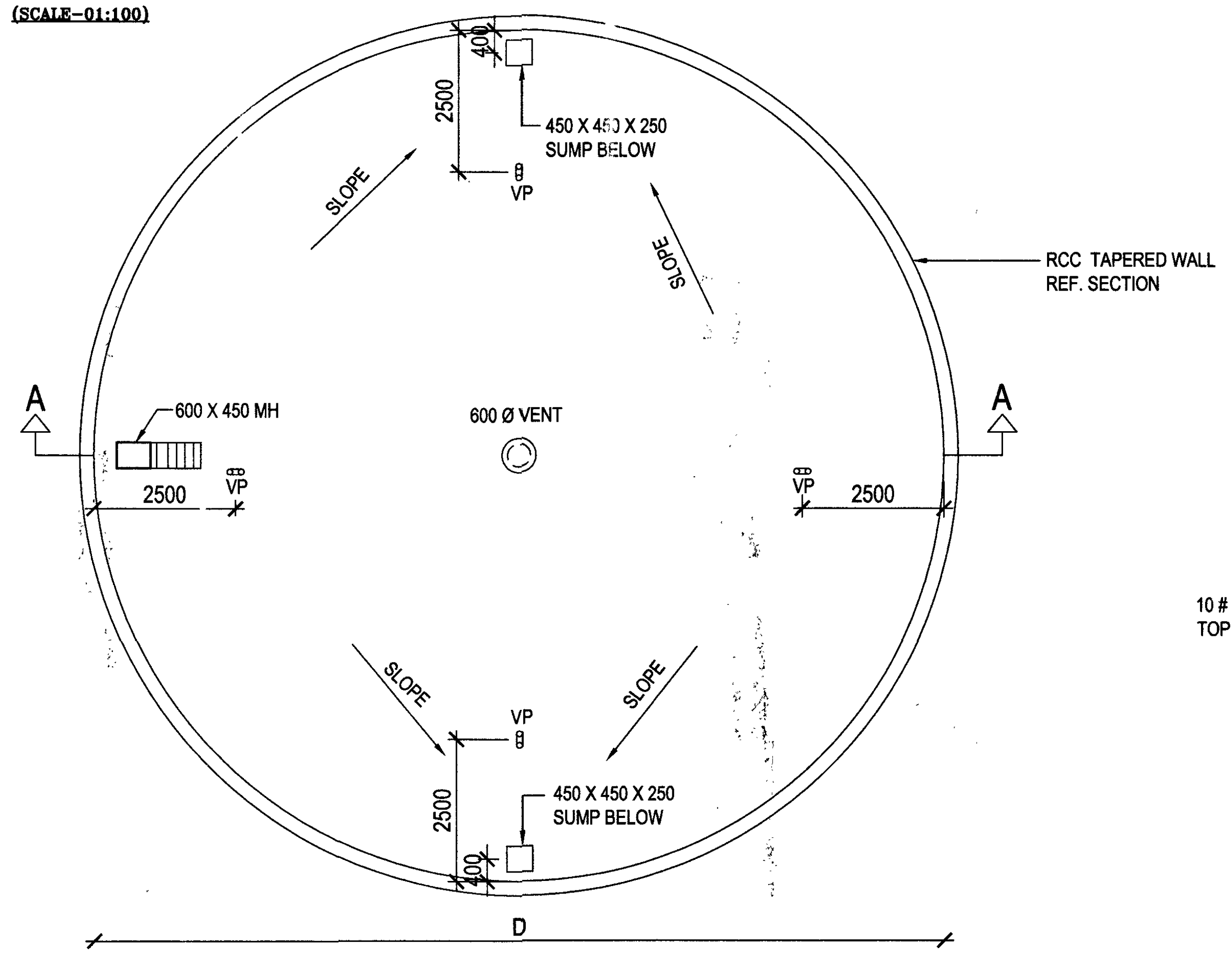
400
2500
450 X 450 X 250 SUMP BELOW
VP
SLOPE
SLOPE
RCC TAPERED WALL REF. SECTION
A
600 X 450 MH
600 Ø VENT
A
2500
VP
VP
2500
SLOPE
SLOPE
VP
2500
450 X 450 X 250 SUMP BELOW
400
D

PLAN OF UG SUMP
(SCALE-01:100)

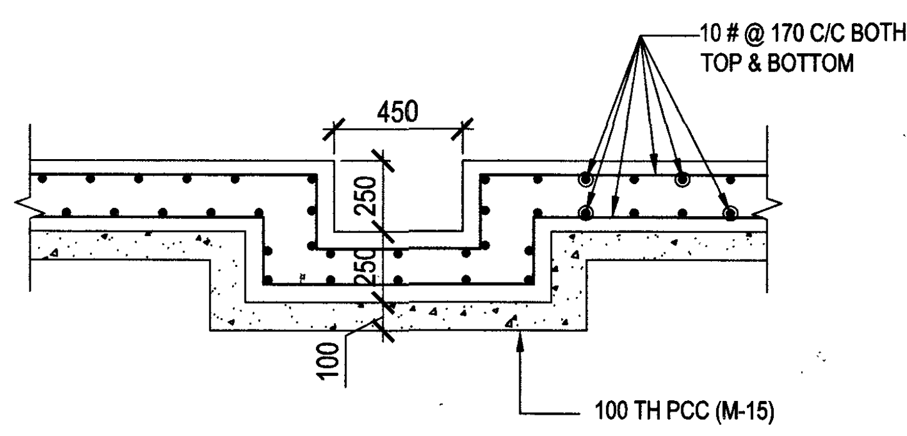
450
10 # @ 170 C/C BOTHWAYS TOP & BOTTOM
250
250
100
100 TH PCC (M-15)

DETAIL OF SUMP PORTION
(SCALE-01:25)

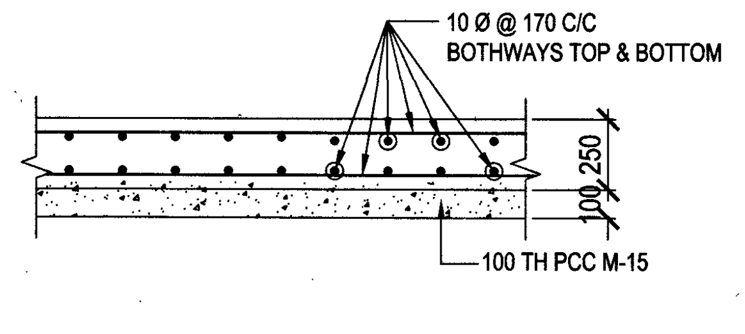
10 Ø @ 170 C/C BOTHWAYS TOP & BOTTOM
250
100
100 TH PCC M-15

DETAIL OF BASE SLAB
(SCALE-01:25)

NOTES

1. CONTRACTOR TO CHECK AND VERIFY ALL DIMENSIONS BEFORE EXECUTION OF THE WORK.
2. FIGURED DIMENSIONS SHALL BE FOLLOWED.
3. ALL DIMENSIONS ARE GIVEN IN MILLIMETERS UNLESS OTHERWISE SPECIFIED.
4. EXECUTIVE SHALL CHECK THE DRG. BEFORE EXECUTION OF THE WORK.
5. REINFORCING STEEL SHALL CONFIRM TO ALL REQUIREMENTS OF Fe- 500D GRADE AS PER IS -1786-2008.
6. CEMENT CONCRETE FOR ENTIRE RCC WORK SHALL BE M-30 DESIGN MIX CONFIRMING TO IS-456:2000 WITH MINIMUM CEMENT CONTENT OF 350 KG/CUM AND MAXIMUM CEMENT CONTENT SHALL NOT BE MORE THAN 450 KG/CUM.
7. TANK/SUMP HAS BEEN DESIGNED FOR SBC OF SOIL 15T/SQM.
8. 900 WIDE PLINTH PROTECTION SHALL BE PROVIDED ALL AROUND THE TANK TOP.
9. SOFFIT AND TOP SURFACE OF DOME SLAB AND ALL SURFACES OF EXTERNAL WALLS SHALL BE PLASTERED WITH 10MM TH IN CM 1:4 MIXED WITH WPC IN ONE LAYERS..
10. NO PART IN RCC SHALL BE DISTURBED OR BROKEN AFTER CASTING OF CONCRETE. ALL FIXURES SHALL BE PLACED IN POSITION BEFORE STARTING OF CONCRETING.
11. THE LOCATION OF INLET, OUTLET, MANHOLE AND SUCTION PITS ARE TENTATIVE AND SHALL AND SHALL BE DECIDED BY GE. THE SIZE OF SUCTION PIPES AS SHOWN ON THE DRAWING ARE TENTATIVE. SUBJECT TO CHANGE AS PER SITE CONDITIONS OF EXISTING PIPE LINE CAPACITY OF PUMP AND ARRANGEMENT OF DISTRIBUTING NETWORK.
12. ALL EXPOSED STEEL WORKS SHALL BE PAINTED WITH TWO COATS OF LEAD FREE ANTI-CORROSIVE PAINT AS PER IS-9862 OVER A COAT OF PRIMER.
13. THE TANK SHALL NOT BE KEPT DRY AFTER COMPLETION OF CURING PERIOD.
14. PROVISION OF NBC & SP-34 SHALL BE FOLLOWED.
15. PROVISION OF IS-3370 CODE FOR PRACTICE OF CONCRETE STRUCTURES FOR THE STORAGE OF LIQUIDS SHALL BE FOLLOWED.
16. COVER TO REINF. SHALL BE AS UNDER :-

BRACES AND FLOOR BEAM	45MM
FLOOR, ROOF SLAB & WALL	45MM
BOTTOM SLAB & WALL FOR WATER CONTAINER	45MM

17. EXPOSURE CONDITIONS : SEVERE.
18. ALL MS WORKS LIKE MS LADDER, VENTILATOR FRAME WORK, MANHOLE COVER FRAMING ETC SHALL BE GALVANIZED, PAINTED WITH ONE COAT OF PRIMER AND 2 COATS OF EPOXY PAINT. ALL EXTERNAL FACE OF CONCRETE SURFACES SHALL BE PAINTED WITH TWO COATS OF WEATHER PROOF EMULSION PAINT OVER A COAT OF PRIMER.
19. EXTRA BARS SHALL BE PROVIDED AROUND MH OPENINGS AS SHOWN IN TYPICAL DETAIL.
20. WATER TO BE USED FOR CONCRETING SHALL MEET ALL REQUIREMENTS OF CLAUSE 5.4 OF IS - 456-2000.
21. DEVELOPMENT LENGTH OF REINFORCEMENT SHALL BE AS PER IS-456.
22. WATER PROOFING:
    (a)INSIDE SURFACE OF TANK WALLS AND FLOORING: CEMENT PLASTER 1:3 WITH SUITABLE PROPORTION OF INTEGRAL WATER PROOFING COMPOUND SUCH AS PIDILITE, FOSROC, SIKA, CIPY ETC SHOULD BE APPLIED IN TWO COATS. THE FIRST COAT BEING 12MM & NEXT 10MM THICK.
    (b)OUTSIDE SURFACE: ONE COAT OF 12MM THICK PLASTER WITH CM 1:3 MIXED WITH INTEGRAL WATER PROOFING COMPOUND.
23. INLET,OUTLET,ETC PIPES SHALL BE PROVIDED WITH PUDDLE FLANGES OF / 3MM TH PLATE.
24. FOLLOWING CODES HAVE BEEN FOLLOWED:-IS 456-2000, IS-1893-2002,IS-1893-PART-2-2014,IS-13920-1993, IS-3370. FOR ANY MISSING DETAILS PLEASE REFER ABOVE CODES.
25. CONSTRUCTION JOINTS SHALL BE TREATED AS PER CLAUSE IS-3370 (PART-1) 2009.
26. ALL CONCRETE MUST BE MACHINE MIXED & MACHINE VIBRATED.
27. SLOPE TO FLOOR SLAB OF SUMP SHOWN IN DRG ARE TENTATIVE, SLOPE SHALL BE PROVIDED AS PER SYSTEM DESIGN
28. AGGREGATE SHALL CONFIRM TO ALL REQUIREMENTS OF IS 383-1970.
29. ALL PIPES SHALL BE PLACED BEFORE CASTING OF THE CONCRETE. BREAKING OF CONCRETE SHALL NOT BE PERMITTED.
30. SUMP SHALL BE CHECKED FOR WATER TIGHTNESS BY FILLING IT IN INCREMENTS OF 600MM HEIGHT AS PER CLAUSE 10.1.2 OF IS 3370 PART-1
31. THOUGH REINFORCEMENT IS TMT, THE HOOKS ARE SHOWN TO INDICATE THE EXTEND OF THE BAR BUT NO HOOKS ARE TO BE PROVIDED. L CRANKING SHALL BE PROVIDED AS PER IS-456-2000 .
32. THE BOTTOM SLAB CONCRETING & VERTICAL WALL CONCRETING SHALL BE MONOLITHIC.
33. AREA DRAINAGE WORK OF THE SURROUNDING AREA SHALL BE CARRIED OUT IN SUCH A WAY THAT NO WATER ACCUMULATION TAKES PLACE .
34. ALL FORM WORK SHALL BE DESIGNED.
35. AS SOON AS SUMP CONSTRUCTION IS COMPLETE THE CONTAINER WILL NOT BE KEPT EMPTY. INITIALLY FOR TESTING IT WILL BE FILLED GRADUALLY BUT NOT EXCEEDING 1M DEPTH PER DAY.
36. WATER TIGHTNESS OF THE TANK SHOULD BE ENSURED AS PER IS - 3370, (PART-1 OF 2009).
37. SPACER BAR OF 25# TO BE PROVIDED WHEREVER TWO OR MORE LAYERS OF -REINFORCEMENT IS PROVIDED IN A BEAM.
38. SUMP BOTTOM SLAB, CYLINDRICAL WALL & BOTTOM RING BEAM TO BE CASTED MONOLITHIC.
39. 4 Nos OF CI VENT PIPES (100MM Ø) SHALL BE EMBEDDED IN ROOF SLAB AS PER DRG.
40. CONSTRUCTION JOINT SHALL BE GIVEN IN THE WALLS AT 750 ABOVE THE HIGHER LEVEL OF BASE SLAB.
41. FOR RCC GENERAL NOTES REFER DRG No. AFB/TD/230/04 SHEET NO. 1/1
42. ANY CAPACITY IN BETWEEN THE CAPACITY MENTION IN SCHEDULE OF UG SUMP THE SAME BE ACHIEVED BY CHANGING THE DEPTH OF WATER IN THE SUMP.

SL No.	DATE	DESCRIPTIONS	INITIAL
R 1.	02-04-2019	SL NO. 42 ADDED IN NOTES.	

REVISIONS

CIRCULAR UNDER GROUND SUMP - CAPACITY 1 LAKH LTRS TO 7,00,000 LTRS (22,000 GLNS TO 1,54,000 GLNS)

PLAN, ELEVATION, SECTIONS AND OTHER MISC. DETAILS

DATE	21 Dec 2017	CHIEF ENGINEER (AIR FORCE) BANGALORE	SHEET NO 1/1
DRN	Sub Digpal Singh		
TCD	–		
CKD			
SCALE	AS SHOWN	DRG.NO AFB /TD/397/2017 (S)	

(UTSAV KUMAR)
MAJ
SO II (DESIGN)

(NALIN SINGHAL, IDSE)
DIRECTOR (DESIGN & PLG)
for CHIEF ENGINEER

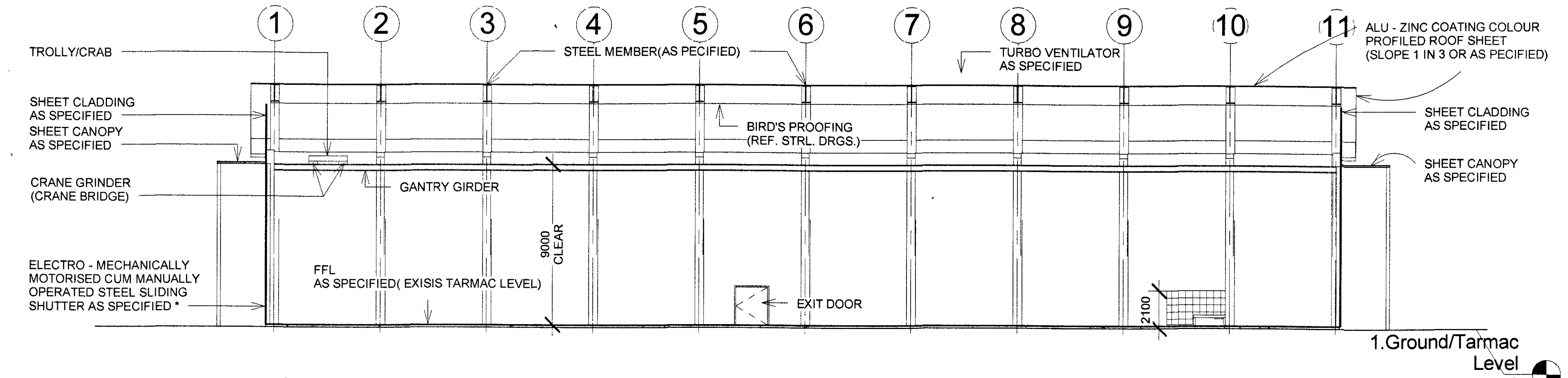
1
2
3
4
5
6
7
8
9
10
11
TROLLY/CRAB
STEEL MEMBER(AS PECIFIED)
TURBO VENTILATOR AS SPECIFIED
ALU - ZINC COATING COLOUR PROFILED ROOF SHEET (SLOPE 1 IN 3 OR AS PECIFIED)
SHEET CLADDING AS SPECIFIED
SHEET CANOPY AS SPECIFIED
BIRD'S PROOFING (REF. STRL. DRGS.)
SHEET CLADDING AS SPECIFIED
SHEET CANOPY AS SPECIFIED
CRANE GRINDER (CRANE BRIDGE)
GANTRY GIRDER
9000 CLEAR
ELECTRO - MECHANICALLY MOTORISED CUM MANUALLY OPERATED STEEL SLIDING SHUTTER AS SPECIFIED *
FFL AS SPECIFIED(EXISIS TARMAC LEVEL)
2100
EXIT DOOR
1.Ground/Tarmac Level 0

B SECTION B
1 : 250

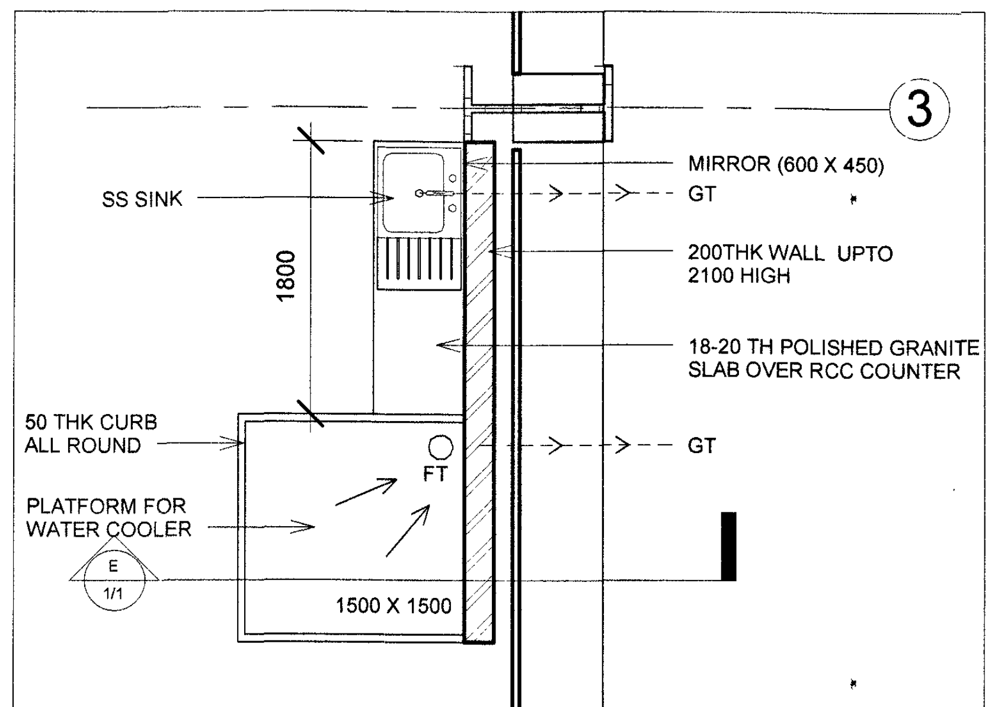
3
SS SINK
MIRROR (600 X 450)
GT
1800
200THK WALL UPTO 2100 HIGH
18-20 TH POLISHED GRANITE SLAB OVER RCC COUNTER
50 THK CURB ALL ROUND
FT
GT
PLATFORM FOR WATER COOLER
E 1/1
1500 X 1500

'D' DETAIL 'D'
1 : 50

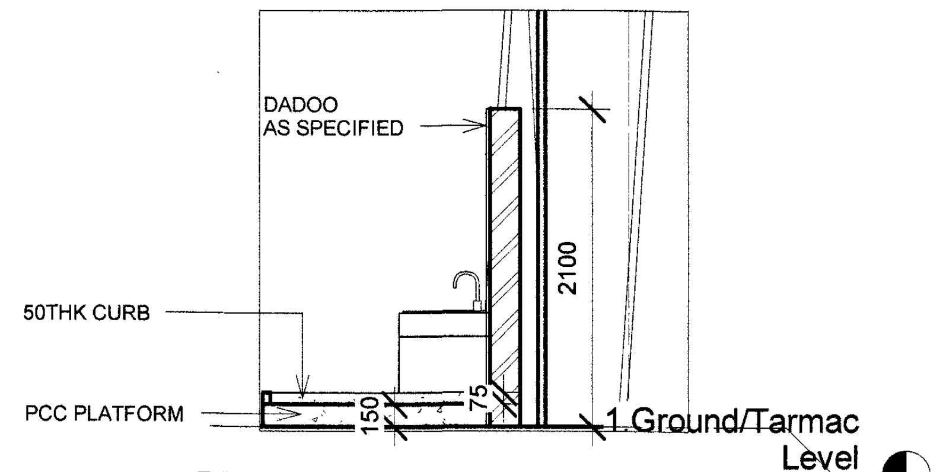
DADOO AS SPECIFIED
2100
50THK CURB
PCC PLATFORM
150
75
1.Ground/Tarmac Level 0

E DETAIL 'E'
1 : 50

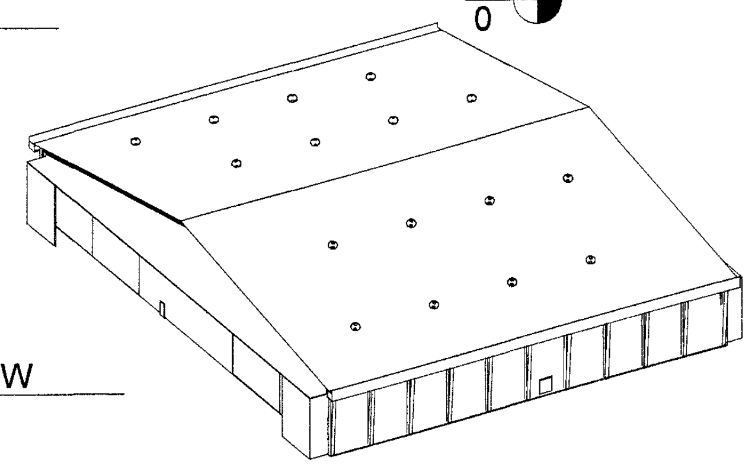

5 3D _VIEW

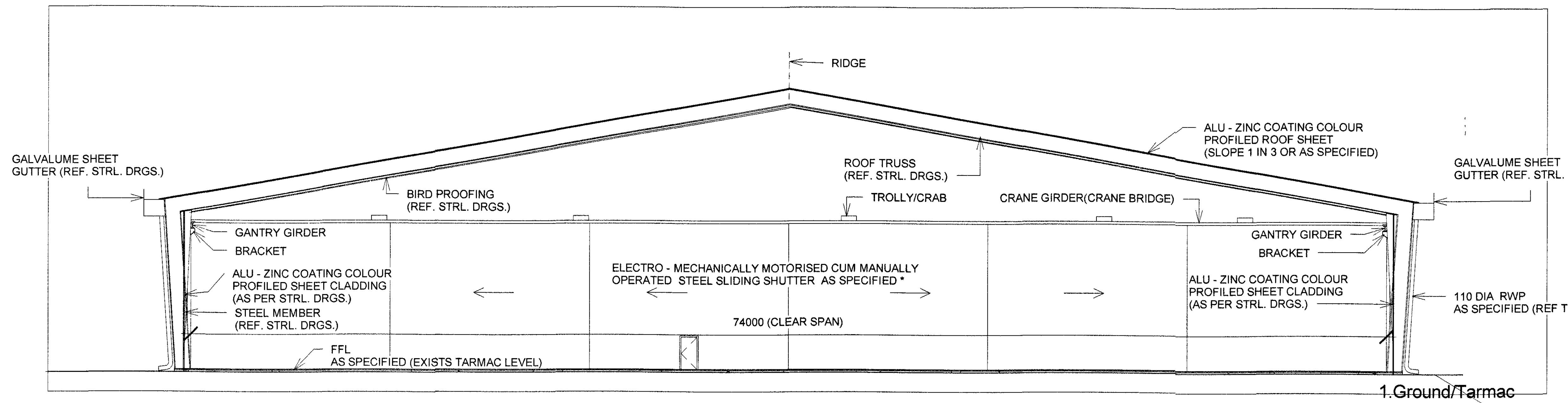
RIDGE
ALU - ZINC COATING COLOUR PROFILED ROOF SHEET (SLOPE 1 IN 3 OR AS SPECIFIED)
GALVALUME SHEET GUTTER (REF. STRL. DRGS.)
GALVALUME SHEET GUTTER (REF. STRL. DRGS.)
ROOF TRUSS (REF. STRL. DRGS.)
BIRD PROOFING (REF. STRL. DRGS.)
TROLLY/CRAB
CRANE GIRDER(CRANE BRIDGE)
GANTRY GIRDER
BRACKET
GANTRY GIRDER
BRACKET
ALU - ZINC COATING COLOUR PROFILED SHEET CLADDING (AS PER STRL. DRGS.)
STEEL MEMBER (REF. STRL. DRGS.)
ELECTRO - MECHANICALLY MOTORISED CUM MANUALLY OPERATED STEEL SLIDING SHUTTER AS SPECIFIED *
ALU - ZINC COATING COLOUR PROFILED SHEET CLADDING (AS PER STRL. DRGS.)
110 DIA RWP AS SPECIFIED (REF TD)
74000 (CLEAR SPAN)
FFL AS SPECIFIED (EXISTS TARMAC LEVEL)
1.Ground/Tarmac Level 0

A SECTION A
1 : 250

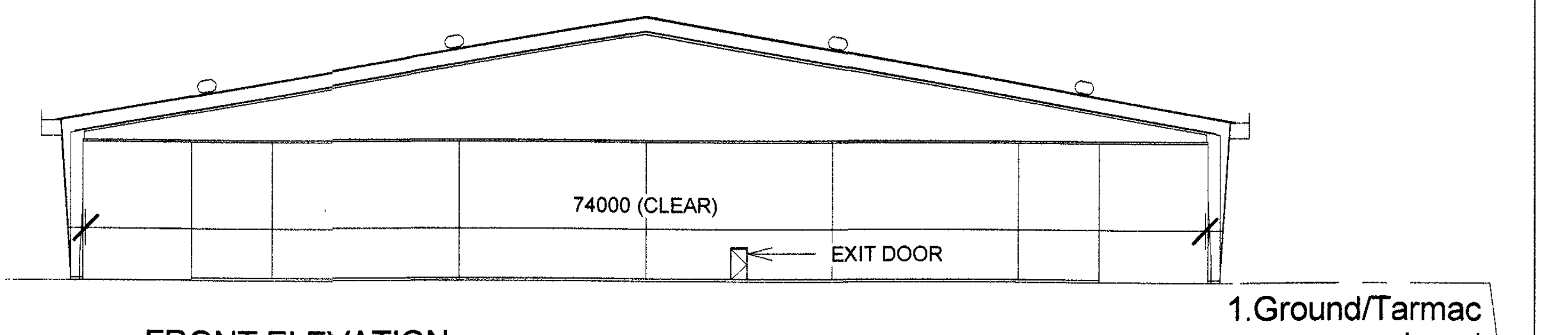
74000 (CLEAR)
EXIT DOOR
1.Ground/Tarmac Level 0

6 FRONT ELEVATION
1 : 500

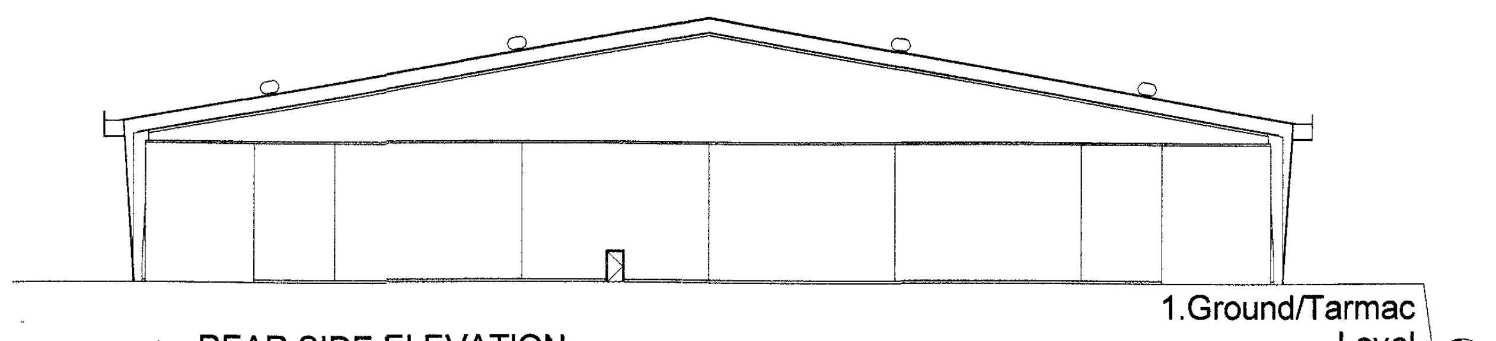
1.Ground/Tarmac Level 0

7 REAR SIDE ELEVATION
1 : 500

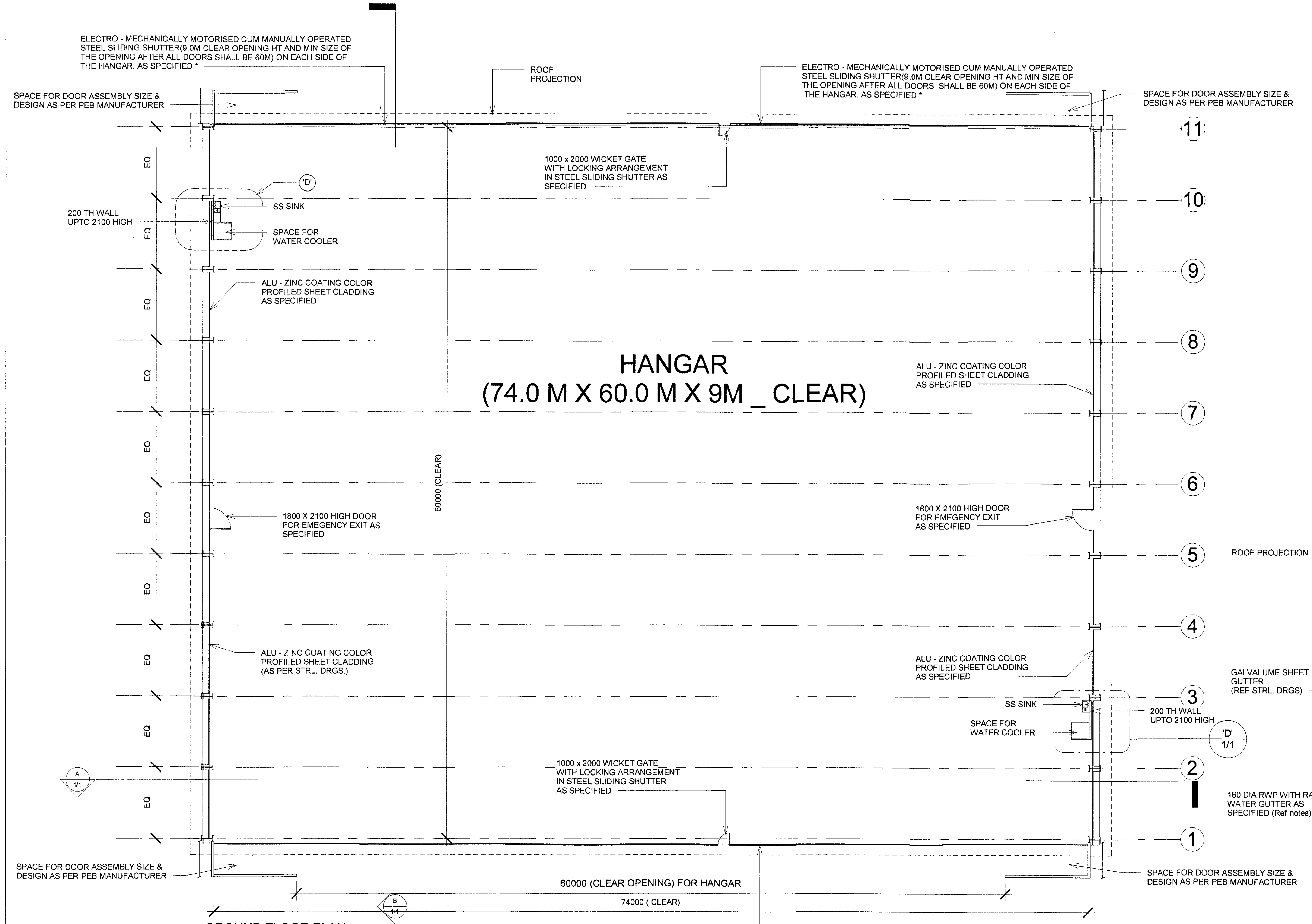
ELECTRO - MECHANICALLY MOTORISED CUM MANUALLY OPERATED STEEL SLIDING SHUTTER(9.0M CLEAR OPENING HT AND MIN SIZE OF THE OPENING AFTER ALL DOORS SHALL BE 60M) ON EACH SIDE OF THE HANGAR. AS SPECIFIED *
ROOF PROJECTION
ELECTRO - MECHANICALLY MOTORISED CUM MANUALLY OPERATED STEEL SLIDING SHUTTER(9.0M CLEAR OPENING HT AND MIN SIZE OF THE OPENING AFTER ALL DOORS SHALL BE 60M) ON EACH SIDE OF THE HANGAR. AS SPECIFIED *
SPACE FOR DOOR ASSEMBLY SIZE & DESIGN AS PER PEB MANUFACTURER
SPACE FOR DOOR ASSEMBLY SIZE & DESIGN AS PER PEB MANUFACTURER
1000 x 2000 WICKET GATE WITH LOCKING ARRANGEMENT IN STEEL SLIDING SHUTTER AS SPECIFIED
'D'
200 TH WALL UPTO 2100 HIGH
SS SINK
SPACE FOR WATER COOLER
ALU - ZINC COATING COLOR PROFILED SHEET CLADDING AS SPECIFIED
HANGAR
(74.0 M X 60.0 M X 9M _ CLEAR)
ALU - ZINC COATING COLOR PROFILED SHEET CLADDING AS SPECIFIED
60000 (CLEAR)
1800 X 2100 HIGH DOOR FOR EMEGENCY EXIT AS SPECIFIED
1800 X 2100 HIGH DOOR FOR EMEGENCY EXIT AS SPECIFIED
ALU - ZINC COATING COLOR PROFILED SHEET CLADDING (AS PER STRL. DRGS.)
ALU - ZINC COATING COLOR PROFILED SHEET CLADDING AS SPECIFIED
SS SINK
200 TH WALL UPTO 2100 HIGH
SPACE FOR WATER COOLER
'D' 1/1
1000 x 2000 WICKET GATE WITH LOCKING ARRANGEMENT IN STEEL SLIDING SHUTTER AS SPECIFIED
A 1/1
B 1/1
EQ
11
10
9
8
7
6
5
4
3
2
1
SPACE FOR DOOR ASSEMBLY SIZE & DESIGN AS PER PEB MANUFACTURER
SPACE FOR DOOR ASSEMBLY SIZE & DESIGN AS PER PEB MANUFACTURER
60000 (CLEAR OPENING) FOR HANGAR
74000 (CLEAR)

1. GROUND FLOOR PLAN
1 : 250

ELECTRO - MECHANICALLY MOTORISED CUM MANUALLY OPERATED STEEL SLIDING SHUTTER (9.0M CLEAR OPENING HT AND MIN SIZE OF THE OPENING AFTER ALL DOORS SHALL BE 60M) ON EACH SIDE OF THE HANGAR. AS SPECIFIED *

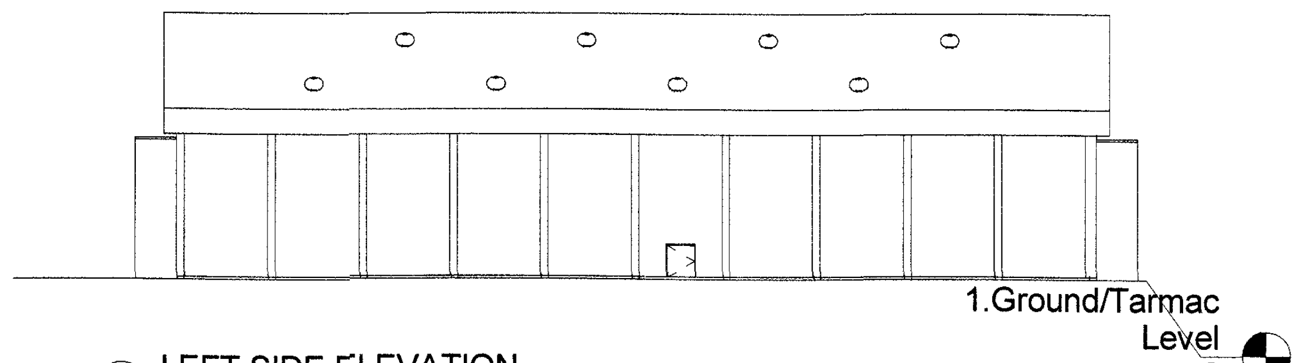
1.Ground/Tarmac Level 0

8 LEFT SIDE ELEVATION
1 : 500

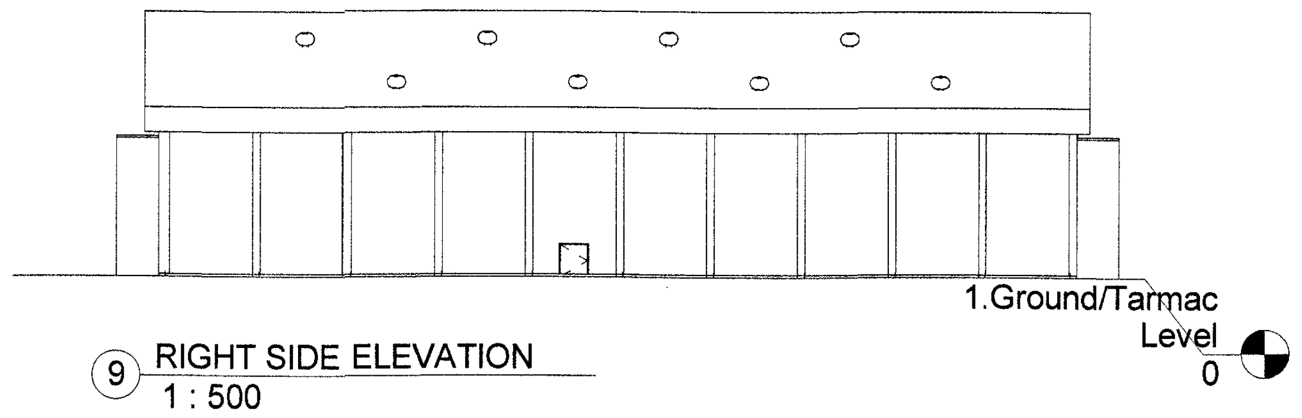
1.Ground/Tarmac Level 0

9 RIGHT SIDE ELEVATION
1 : 500

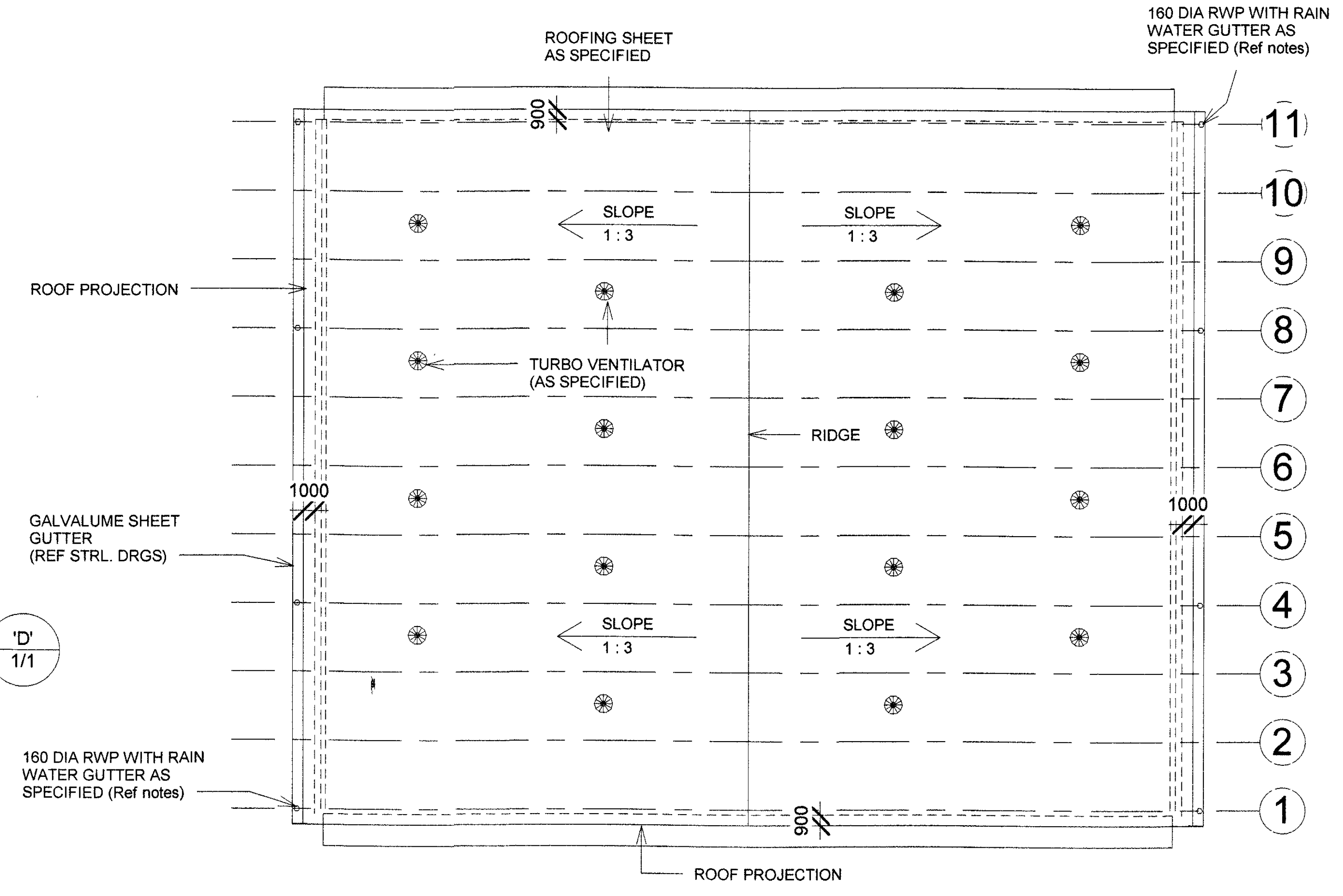
ROOFING SHEET AS SPECIFIED
160 DIA RWP WITH RAIN WATER GUTTER AS SPECIFIED (Ref notes)
900
SLOPE 1 : 3
SLOPE 1 : 3
ROOF PROJECTION
TURBO VENTILATOR (AS SPECIFIED)
RIDGE
GALVALUME SHEET GUTTER (REF STRL. DRGS)
1000
1000
SLOPE 1 : 3
SLOPE 1 : 3
160 DIA RWP WITH RAIN WATER GUTTER AS SPECIFIED (Ref notes)
900
ROOF PROJECTION
11
10
9
8
7
6
5
4
3
2
1

4 ROOF PLAN
1 : 500

LEGEND

● - TURBO VENTILATORS IN PLAN (AS SPECIFIED)

SL NO	NOTES
1.	CONTRACTOR TO CHECK AND VERIFY ALL DIMENSIONS BEFORE EXECUTION OF WORKS.
2.	FIGURED DIMENSIONS SHALL BE FOLLOWED.
3.	ALL DIMENSIONS ARE IN MILLIMETRES UNLESS OTHERWISE SPECIFIED.
4.	2 TON DOUBLE GIRDER EOT CRANE OF SPAN 74 MTR, LONGITUDINAL MOVEMENT OF 60MTR AND LIFTING HEIGHT OF 7.5MTR.(AS SPECIFIED)
5.	DETAILS OF COLUMN, ROOF, GUTTER AND TRUSS ARE SCHEMATIC ONLY AND TO BE FINALISED BY STRUCTURAL DESIGNER BASED ON THE DIMENSION GIVEN IN THIS DRG.
6.	THE MIN. CLEAR SPAN REFERS TO THE SPAN AT THE TOP OF THE COLUMNS AS THE SIZE OF COLUMNS/ STRUCTURAL MEMBERS VARIES FROM TOP TO BOTTOM.
7.	GRID DIMENSION ARE TENTATIVE AND SAME SHALL BE FOLLOWED AS PER STRUCTURAL DRG.
8.	PROPER DRAIN OUT OF RAIN WATER SHALL BE ENSURED DURING PREPARATION OF STRUCTURAL DRAWING BY PROVIDING REQUIRED NUMBER OF(MIN 4 NO'S ON ONE SIDE) RAIN WATER PIPES
9.	LOCATION OF WHB AND WATER COOLER ARE TENTATIVE , ACTUAL LOCATION WILL BE DECIDED BY ENGR-IN-CHARGE AS PER SITE CONDITION.
10.	* ELECTRO - MECHANICALLY MOTORISED CUM MANUALLY OPERATED STEEL SLIDING SHUTTER (9.0MTR CLEAR OPENING HEIGHT AND MIN. SIZE OF THE OPENING AFTER ALL DOORS SHALL BE 60M) ON EACH SIDE OF THE HANGER SHALL BE PROVISIONED AS PER SPECIFICATION.
11.	THE PROFILE OF ROOFING IS TENTATIVE AND TO BE DESIGNED AS PER THE STRUCTURAL DESIGNER.
12.	DETAILS OF WALL AND DOORS SHOWN IN THE DRAWING ARE SCHEMATIC SHALL BE DESIGNED BY THE PEB MANUFACTURER AS PER USER REQUIREMENT AND NBC NORMS.
13.	SHEET CLADDING (AS SPECIFIED) SHALL BE PROVIDED FROM THE FLOOR LEVEL UPTO THE BOTTOM OF THE SHEET ROOF. NECESSARY STRUCTURAL ELEMENTS MAY BE PROVIDED AS PER STRUCTURAL DRAWINGS.

LIST OF DRAWINGS

SL NO.	DESCRIPTION	DRG NO.	SHEET NO	DATE	REV DATE
1	SITE PLAN SHOWING EXTERNAL B&R AND E&M SERVICES	AFB/SP/ 17 /2023	1/1	03.08.2023	18.10.2023
ARCHITECTURAL DRAWINGS					
1	PLAN, SECTION, ELEVATION, ROOF PLAN, LIST OF DRGS AND 3D VIEW	AFB/WD/ 14 /2023	1/1	02.08.2023	

SL NO	DESCRIPTION	DATE	SIGN
1.	IN LIST OF DRAWINGS REVISION DATE ADDED	18/10/23	DM

REVISION

PROVN OF AIRCRAFT HANGAR FOR 109 HU AT AF STN SULUR

HANGAR

PLAN, SECTIONS, ELEVATIONS, ROOF PLAN, MISC DETAILS AND LIST OF DRGS AND 3D VIEW

DATE	02.08.2023	**CHIEF ENGINEER (AIR FORCE) BANGALORE**	SHEET NO
DRN	NB SUB RAHUL		**1/1**
TCD	—		
CKD	—		
SCALE	AS SHOWN	**AFB/WD/ 14 /2023**	

(NISHA DASAN)
ARCHITECT
Jt DIRECTOR (Arch)

Dmandal
(DEBOTOSH MANDAL)
Sr ARCHITECT
DIRECTOR (Arch)
for Chief Engineer